VALVEWORKS USA

WHEN PRESSURE DEMANDS QUALITY®

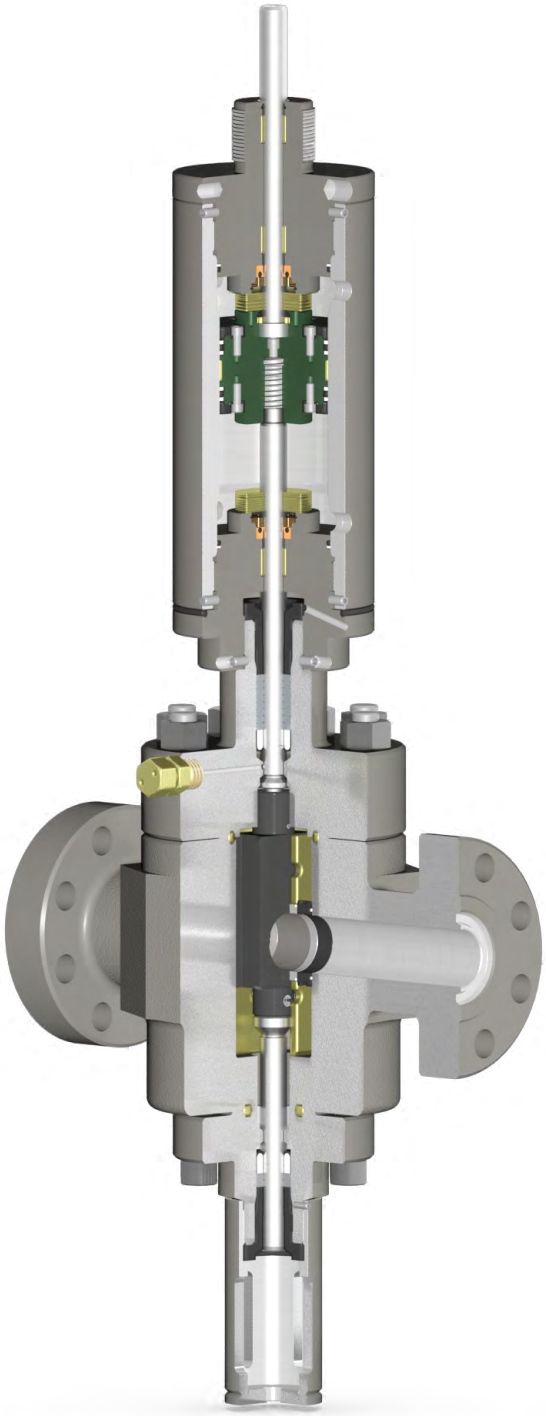

DOUBLE ACTING HYDRAULIC ACTUATOR (DAH) GATE VALVE SERVICE AND OPERATION MANUAL

PROPRIETARY BOOKLET OF VALVEWORKS USA. DO NOT REPRODUCE WITHOUT EXPLICIT PERMISSION.

SALES@VWUSA.US WWW.VALVEWORKSUSA.COM

VALVEWORKS USA
WHEN PRESSURE DEMANDS QUALITY®

INTRODUCTION

In appreciation to our customer for purchasing our product, we have prepared this Operation Manual to assist you in the Operation, Maintenance, Assembly and Installation of the Valveworks USA API 6A Double Acting Hydraulic Actuator (DAH) Gate Valve. We encourage following the recommendations in this booklet
to attain the best possible service from our product, which is designed and proven to offer the service one can expect of a quality product.
To contact a representative for more specific information pertaining to a special problem:

VALVEWORKS USA
WHEN PRESSURE DEMANDS QUALITY®
1650 SWAN LAKE ROAD
BOSSIER CITY, LA USA 71111

PHONE	318-425-0266
FAX	318-425-0934
TOLL FREE	888-425-0266
EMAIL	SALES@VWUSA.US
WEBSITE	WWW.VALVEWORKSUSA.COM

QUALITY

Valveworks USA management and employees are committed to continually improve the effectiveness of our quality management system to produce a quality assured product which meets or exceeds our customer's expectations and requirements.

SAFETY

Caution must be taken as to the surrounding area and its potential dangers of projectiles.
Pressure kills! Even a loose, stand alone valve may contain trapped pressure which will turn any component into a projectile missile when disassembled, causing injury or death. Never stand over a component or in its path of release during assembly. Always operate the valves from the open to close position slowly releasing trapped pressure. Always remove fittings first, taking extreme caution to their potential danger as a projectile. If the valve is frozen and can not be operated, take extreme caution to the disassembly of the components.
Weighted blankets or protective screens and shields should be utilized. Caution should be taken when handling components during disassembly and assembly, as most components are heavy, greasy, hard to handle and have edges which can cause injury. Always be cautious of how the valve is positioned and standing. Be sure the valve is secured in position so there is no possible chance of tipping over. Never apply test pressure above the manufacturers rated working pressure. The shell test pressure above the working pressure has already been tested by the manufacturer and is not required after the initial assembly test of the valve. The manufacturer has already verified the quality of the valve shell body components and will void the warranty from the manufacturer if the valve is pressure tested above the rated working pressure indicated for the valve. Always wear steel toes shoes, hard hat, eye and ear protection while performing repairs.

PROPRIETARY BOOKLET OF VALVEWORKS USA. DO NOT REPRODUCE WITHOUT EXPLICIT PERMISSION.

VALVEWORKS USA
WHEN PRESSURE DEMANDS QUALITY®

TABLE OF CONTENTS

APPLICATIONS	4
TEMPERATURE RATING	4
TRIM CHART	4
ORDERING INFORMATION	5-7
PERIODIC MAINTENANCE	7
ACTUATOR ASSEMBLY INSTRUCTIONS	8
ACTUATOR ASSEMBLY-BOM	9-11
BONNET ASSEMBLY INSTRUCTIONS	12
BONNET ASSEMBLY-BOM	13
BONNET TO VALVE ASSEMBLY INSTRUCTIONS	14
BONNET TO VALVE ASSEMBLY-BOM	15
BONNET TO VALVE ASSEMBLY-DRIFT SETTING	16
ACTUATOR TO BONNET ASS'Y INSTRUCTIONS	16
ACTUATOR TO BONNET ASSEMBLY-BOM	17
OPERATION	18
TROUBLESHOOTING	19
DIMENSIONS	20

PROPRIETARY BOOKLET OF VALVEWORKS USA. DO NOT REPRODUCE WITHOUT EXPLICIT PERMISSION.

VALVEWORKS USA
WHEN PRESSURE DEMANDS QUALITY®

APPLICATIONS

Valveworks USA Double Acting Hydraulic Actuator (DAH) gate valves can be applied to the following sizes and working pressures.

APPLICATION	OPTIONS AVAILABLE
GATE VALVE SIZE	1-13/16 through 7-1/16
MAXIMUM ALLOWABLE WORKING PRESSURE (MAWP)	0 to 20M
ACTUATOR MAXIMUM OPERATING PRESSURE	2500 PSI
TEMPERATURE RANGE	-60°C TO 121°C (-75°F TO 250°F)

The Double Acting Hydraulic Actuator (DAH) Gate Valves covered in this manual are suitable for performance requirement levels 1 and 2, PR1 and PR2 respectively.

TEMPERATURE RATING

TEMPERATURE CLASSIFICATION	OPERATING RANGE			
	°C		(°F)	
K	-60	82	-75	180
L	-46	82	-50	180
N	-46	60	-50	140
P	-29	82	-20	180
S	-18	60	0	140
T	-18	82	0	180
U	-18	121	0	250
V	2	121	35	250

TRIM CHART

MATERIAL CLASS	MINIMUM MATERIAL REQUIREMENTS	
	BODY, BONNET, END AND OUTLET CONNECTIONS	PRESSURE-CONTROLLING PARTS, STEMS, AND MANDREL HANGERS
AA - General Service	Carbon or low-alloy steel	Carbon or low-alloy steel
BB - General Service	Carbon or low-alloy steel	Stainless steel
CC - General Service	Stainless steel	Stainless steel
DD - Sour Service [a]	Carbon or low-alloy steel [b]	Carbon or low-alloy steel [b]
EE - Sour Service [a]	Carbon or low-alloy steel [b]	Stainless steel [b]
FF - Sour Service [a]	Stainless steel [b]	Stainless steel [b]
HH - Sour Service [a]	CRAs [b]	CRAs [b]

[a] As defined by NACE MR0175.
[b] In compliance with NACE MR0175.

As shown by API-6A. For specific details consult Valveworks USA.

PROPRIETARY BOOKLET OF VALVEWORKS USA. DO NOT REPRODUCE WITHOUT EXPLICIT PERMISSION.

VALVEWORKS USA
WHEN PRESSURE DEMANDS QUALITY®

ORDERING INFORMATION

The following information should be provided with any request for quote or order placement of Valveworks USA Double Acting Hydraulic Actuator (DAH) Gate Valves:

ACTUATOR

- Model, Series and Size of Actuator
- API 6A Requirements (PR – PSL)
- ISO Certification Requirements
- Control Fluid Power
- Well Fluid Power
- Temperature
- Location (Onshore/Offshore)
- Material (API 6A)
- Actuator Control Pressure Availability
- Special Test Requirements
- Special Material Requirements

BONNET (to be supplied by VALVEWORKS USA)

- Model of Bonnet
- Size of Bonnet
- Pressure Rating (max.)
- Manufacturer (other than VALVEWORKS USA)
- API 6A Requirements (PR – PSL)
- Temperature (API 6A)
- Material (API 6A)
- Special Test Requirements
- Special Material Requirements
- Special Coating or Protection Requirements

VALVE

- Model of Valve
- Size of Valve
- Pressure Rating (maximum)
- API 6A Requirements (PR-PSL)
- API 14D Requirements (Class of Service)
- Temperature Rating (API 6A)
- Material (API 6A)
- Any Special Test Requirements
- Any Special Material Requirements
- Any Special Coating or Protection Requirements
- Other Specifications and/or Certifications

PROPRIETARY BOOKLET OF VALVEWORKS USA. DO NOT REPRODUCE WITHOUT EXPLICIT PERMISSION.

VALVEWORKS USA
WHEN PRESSURE DEMANDS QUALITY®

ACTUATOR ACCESSORIES (MECHANICAL)

Clear Stem Protector:

This device made of polycarbonate tubing protects the rising shaft of the actuator from the adverse effects of weather, sandblasting, contaminating operating environments and paint.

MANUAL OVERRIDING DEVICE:

This device is used to mechanically stroke the actuator. It is used on small or low-pressure valves while valve body is pressurized. It is typically used during installation and testing phases of well completions.

Hydraulic Opener:

Typically used for stroking large or high-pressure valves under well pressure and sometimes work over operations. These openers also replace the hand wheel opener which cannot be employed in high torque requirement applications.

Fusible Lock Open Cap:

Mechanically holds open the actuator and valve during work over or when the safety systems are inoperative. This device locks the actuator in the down position, allowing it to rise only in the event of a fire.

ACTUATOR ACCESSORIES (ELECTRICAL)

Electrical Limit Switch:

An electrical contact permits a remote indication of gate valve position (full open or full closed). Typically used on large production platforms where there is remote monitoring and control of valves.

Continuous Position Indicators:

Linear displacement transducers operate at low currents. The frequency of their output can be used to provide exact position throughout the range between the open and closed positions.

Proximity Switches:

This magnetically operated switch senses the linear motion of the valve by Magnetic action either with or without the need for physical contact.

Hydraulic Switches:

Hydraulic limit switches are available for use when electrical supply is not present.

Magnetic Reed Switches:

This magnetic reed switches device is activated by a magnetic field. It monitors linear travel of the gate valve. The switches are completely sealed against harsh environments.

PROPRIETARY BOOKLET OF VALVEWORKS USA. DO NOT REPRODUCE WITHOUT EXPLICIT PERMISSION.

VALVEWORKS USA
WHEN PRESSURE DEMANDS QUALITY®

ACTUATOR SELECTION

To simplify the process of selecting an actuator for a specific job, contact a Valveworks USA sales representative. Note that higher control supply pressure makes possible the use of smaller size actuators. If the maximum flow line pressure is much less than the pressure rating of the valve, then selection of the size of the actuator for this lower pressure rating will be less expensive.

PROCEDURE

It is important to determine valve specifications such as size, maximum working pressure, and expected shut-in pressure or maximum sales line delivery pressure. If maximum flowline pressure is less than half of the maximum working pressure of the valve consult Valveworks USA for optimum sizing of actuator. Also, determine the available control pressure (Hydraulic Pressure) supply at the well site. This supply can be rated up to 2500 psi.

To determine the necessary actuator series (550, 650 or 850) please use the graphs provided in the appendix. For further assistance in ordering the right actuator series, contact Valveworks USA sales agent. To interpret the graphs for normal valve sizes, find the maximum Flowline Pressure on the lower horizontal axis. Next, find the Actuator Control Pressure on the left hand vertical axis. After locating the Flowline Pressure and the Actuator Control Pressure, locate their intersection point by drawing a vertical line from the selected Flowline Pressure and a horizontal line from the selected Actuator Control Pressure.

PERIODIC MAINTENANCE

Valveworks USA recommends the following maintenance schedule.

Interval	Maintenance Operation
Once a Month	Cycle open and close one time.
As Required	Clean debris from vent and breather holes. Replace as needed.
Every 5 years	Replace Safety Valve
Every 5 years	Replace piston seals and wear rings.
When seals are replaced	Inspect top shaft and interior of piston housing.

These are just recommended intervals of maintenance. Depending on the level of usage, your valve(s) may require more or less maintenance than this manual suggests. For more information, contact Valveworks USA.

PROPRIETARY BOOKLET OF VALVEWORKS USA. DO NOT REPRODUCE WITHOUT EXPLICIT PERMISSION.

VALVEWORKS USA
WHEN PRESSURE DEMANDS QUALITY®

ASSEMBLY INSTRUCTIONS

The following steps have to be followed before assembly of any component of the DAH series equipped valves.

- Assembly work area must be clean and free of dirt, metallic shavings and wood particles.
- Surface preparation of work area should be metallic or covered with a layer of corrugated cardboard.
- All lubricants and utensils used in assembly must be clean.
- All tools used in assembly must be clean and in good working order.
- Clean all components (metallic) prior to assembly.
- Keep all elastomers and plastic base materials in bags or boxes until needed for assembly.
- Inspect all components for burrs, dings, marks, scrapes, nicks, and etc. prior to assembly.

DOUBLE ACTING HYDRAULIC ACTUATOR

- Inspect internal surface finish of piston housing (9).
- Check all non-metallic components for flash, nicks, cuts, abrasions and etc.
- Inspect seal bore of threaded boss on top plug (2) for surface imperfections. Make sure coating is smooth. No ripples or fish eyes or covered particles are present.
- Grease entire bore of the top plug with light application of white silicone grease.
- Install polypaks (21), wear bearings (17) and rod wiper (20) inside the top plug.

Caution: Make sure lip of rod wiper is pointing toward grooved end of top plug.

- Install O-ring (8) on nose of top plug. Grease lightly. (The top plug is now assembled.)
- Grease outside diameter of piston (12) lightly.
- Install polypaks (21) and wear bearings (16) outside the piston.
- Place top shaft (1) in top of piston and install seal retainer (2).

Caution: Make sure retainer ring snaps into groove completely.

The piston assembly is now complete.

- Apply never-seize or equivalent to inside diameter threads of the body housing (9) and outside diameter threads of the piston housing.
- Screw piston housing into body housing until piston housing bottoms. Install set screws (26) into body housing.
- Lightly grease piston bore and slide the top shaft through the top plug.
- Apply never-seize or equivalent to inside diameter threads of piston housing and outside diameter threads of top plug.
- Screw top plug into the piston housing until the top plug bottoms. Install set screws into piston housing.
- Insert one .625 – 11 UNC – 2A X 1.75 long bolt (25) through hole in lock open cap (13).
- With one hand holding top shaft from moving, place the lock open cap over and onto the crown of the top shaft with the other hand and rotate the bolt into the threaded hole of the top shaft.
- Rotate the lock open cap in a clockwise direction until lock open cap stops on shoulder of top plug case. (This action suspends the internal components from moving in any direction.)
- The Valveworks USA Double-Acting Hydraulic Actuator is now assembled and ready for testing.

Before the completed DAH actuator can be tested, it must be thoroughly inspected. If this is a new actuator assembly, it must be adapted to a bonnet assembly and stroked several times, making sure that operating is smooth and complete by using an adequate hydraulic pressure. Once this new actuator assembly is mounted to the bonnet assembly, make sure that the lower housing to base plate and bolts are in place, tightened and secure. If this is a new actuator assembly, or if the bonnet, actuator, or valve have been repaired, testing must be performed by procedures outlined in API 14D or API 6A whichever is applicable for the valve and service. (This testing excludes Hydrostatic testing of the actuator). A certified individual should perform all assembly and testing.

PROPRIETARY BOOKLET OF VALVEWORKS USA. DO NOT REPRODUCE WITHOUT EXPLICIT PERMISSION.

VALVEWORKS USA
WHEN PRESSURE DEMANDS QUALITY®

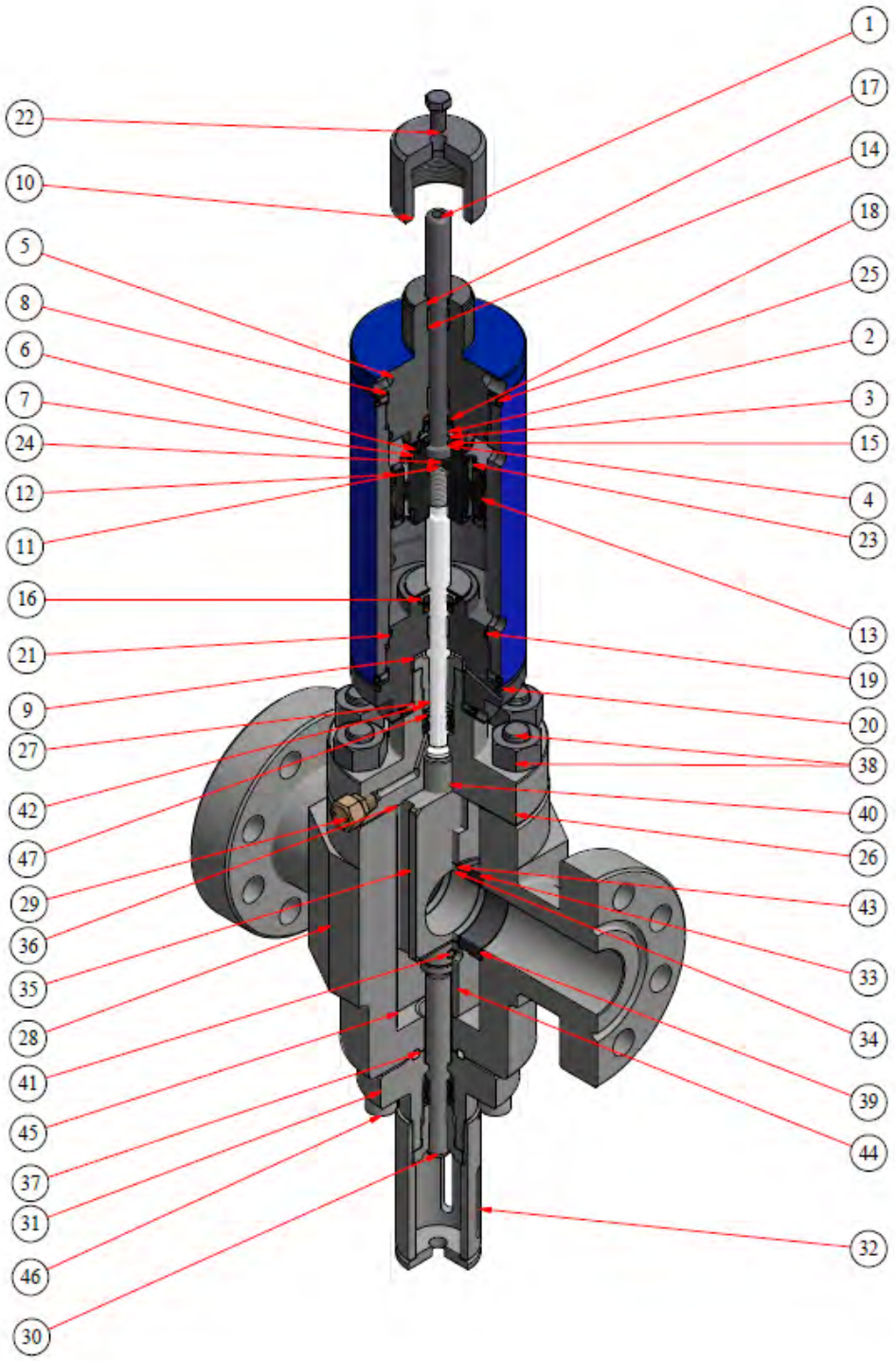

Double Acting Hydraulic Actuator (DAH)

PROPRIETARY BOOKLET OF VALVEWORKS USA. DO NOT REPRODUCE WITHOUT EXPLICIT PERMISSION.

VALVEWORKS USA
WHEN PRESSURE DEMANDS QUALITY®

Double Acting Hydraulic Actuator (DAH) - BOM		
ITEM	DESCRIPTION	QTY
1	TOP SHAFT	1
2	SEAL RETAINER	2
3	SHIM - COARSE	3
4	RETAINER PLATE	1
5	TOP CAP	1
6	PISTON	1
7	SEAL FACE PLATE	2
8	HYDRAULIC HOUSING	1
9	LOWER CAP	1
10	LOCK OPEN CAP	1
11	OPERATING STEM	1
12	PISTON SEAL	2
13	WEAR BEARING	1
14	WEAR BEARING	3
15	RETAINER RING	1
16	RETAINER RING	2
17	ROD WIPER	1
18	POLYPAK SEAL	2
19	O-RING	2
20	O-RING	1
21	BACKUP RING	2
22	BOLT, HEX HD	1
23	CAP SCREW	8
24	CAP SCREW	1
25	SET SCREW	12
26	BONNET	1
27	PACKING GLAND	2
28	BODY	1
29	BODY GREASE FITTING	1
30	STEM, LOWER	1
31	LOWER BONNET	1
32	STEM PROTECTOR	1
33	BODY BUSHING	2
34	SEAT	2
35	GATE	1
36	BONET SEAL RING, UPPER	1
37	BONNET SEAL RING, LOWER	1
38	STUD W NUT	8
39	BODY BUSHING SEAL	2
40	ROLL PIN	1
41	ROLL PIN	1
42	BACKUP SUPPORT RING	1
43	SEAT SEAL, F FC	2
44	RETAINER PLATE	2
45	GATE GUIDE	2
46	CAPSCREW, SOCKET HD.	8
47	PACKING OPTI-SEAL	2

PROPRIETARY BOOKLET OF VALVEWORKS USA. DO NOT REPRODUCE WITHOUT EXPLICIT PERMISSION.

VALVEWORKS USA
WHEN PRESSURE DEMANDS QUALITY®

BONNET

The Bonnet is the part of the actuator that connects the actuator to the valve. Valveworks USA can manufacture the bonnet to adapt to each manufacturer or use the Adapter Bonnet Kit, when bonnet is to be supplied by the valve manufacturer. This adaptation component is designed for each manufacturer and each model of valve.

The following are the assembly instructions for the bonnet:

- Inspect the bonnet in the following critical areas:
- Bonnet gasket seal face
- Fire seal area
- Retaining threads for lower bonnet flange
- Proper identification after testing with proper marking technique on flange outer diameter or nameplate identification. This includes all additional porting such as bleeder holes, etc. Porting will differ with each valve manufacturer.
- Seal bore for packing cartridge 10. Install two O-rings (8) (with backups when required) into packing cartridge (37) bore. Make sure T-seal backups are properly installed with skive cut.
- Install polypaks (21) and wear bearings (17) into the upper and lower region of the packing cartridge bore. (Packing Cartridge is now assembled.)
- Install rod wiper (20), polypak (21), and wear bearing (17) into the bore of the bonnet ring. (Bonnet ring is now assembled.)
- Place bonnet (35) on flat surface. Lightly grease packing cartridge bore and Insert packing cartridge into bore of bonnet. (Should install full stroke by hand.)
- Lightly coat entire length of stem (15) and slide stem into bonnet. Be careful to center stem as it slides through packing cartridge. (The stem should travel its full length to backseat by hand). Wipe off excess grease after stem is in the backseated position.
- Position bonnet ring over and down onto nose of stem. Be careful to center stem as it slides through the polypak and bearing. Push down by hand until thread engagement is made. Rotate bonnet ring clockwise until it stops on the bonnet shoulder.
- Lightly grease the dog point set screw (10) and thread the screw into the circular groove on the bonnet by rotating clockwise in the tapped hole. The screw must stop below the outer diameter of the bonnet ring.
- Place spacers (5) on bonnet stem and slide down onto face of bonnet ring. 2-4 spacers will be installed depending on the stroke of the valve.
- (Note: If the valve is a gate valve see page 15 for proper drift setting.)
- The bonnet is now complete and ready to be assembled and tested.
- The valve and bonnet assembly must be tested in accordance with API 6A as applicable to the valve usage and service.
- All assembly and testing must be performed by a certified assembler and tester.

PROPRIETARY BOOKLET OF VALVEWORKS USA. DO NOT REPRODUCE WITHOUT EXPLICIT PERMISSION.

VALVEWORKS USA
WHEN PRESSURE DEMANDS QUALITY®

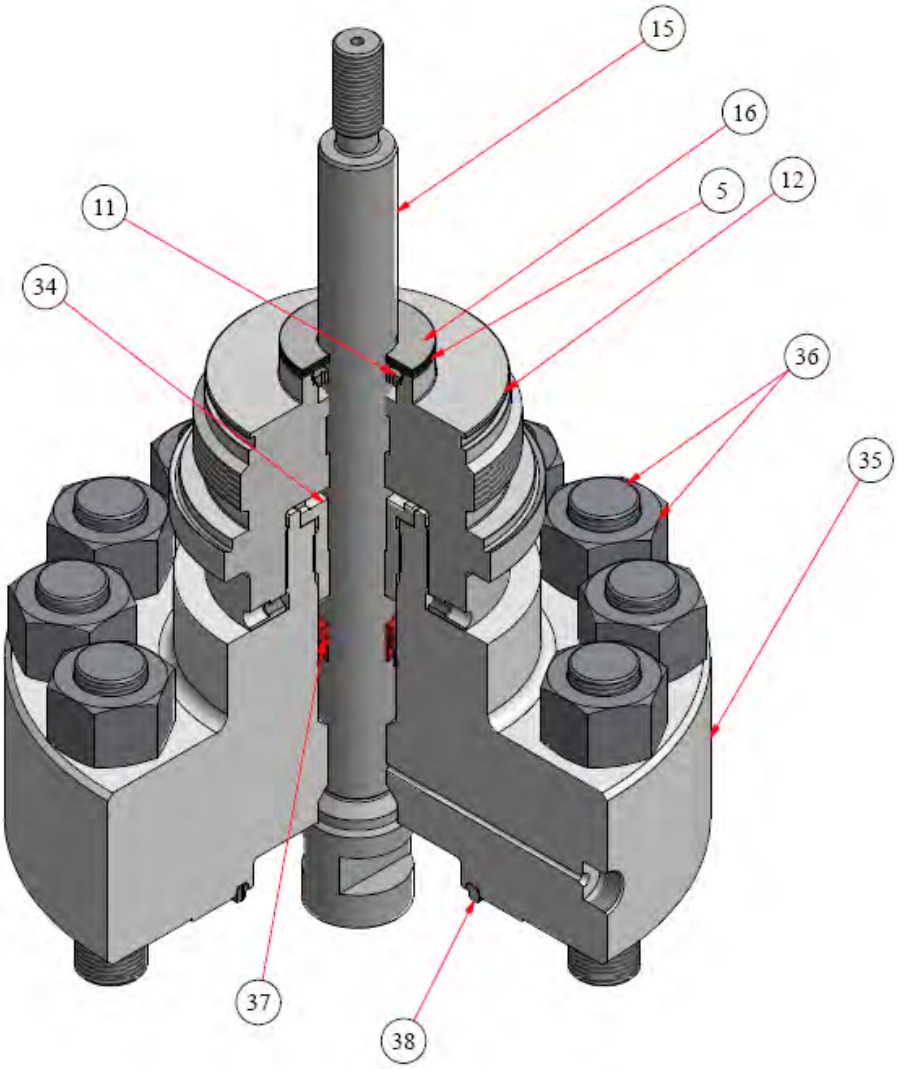

BONNET ASSEMBLY - BILL OF MATERIALS		
ITEM	QTY	DESCRIPTION
5	3	SHIM, COARSE, LOWER
16	1	SHIM, FINE, LOWER
11	1	SEAL RETAINER, LOWER
12	1	LOWER CAP
15	1	STEM, OPERATING
34	1	PACKING GLAND
35	1	BONNET, UPPER
36	24	STUD W NUT
37	1	PACKING
38	1	UPPER BONNET SEAL RING

PROPRIETARY BOOKLET OF VALVEWORKS USA. DO NOT REPRODUCE WITHOUT EXPLICIT PERMISSION.

VALVEWORKS USA
WHEN PRESSURE DEMANDS QUALITY®

BONNET TO VALVE

When installed on an unbalanced gate valve, the Valveworks USA Bonnet assembly is the interface between the actuator and the gate valve. The bonnet will provide leak-free sealing when the valve is being operated or in the static condition. Before adaption of the actuator, the stem should stroke freely in both directions.

When the valve is pressured in the full closed position the stern will be urged outward because of valve pressure acting upon the bonnet stem diameter. The Valveworks USA bonnet is used as an up and downstop for the valve. This design prevents damage to the valve or to the bonnet stem in the event of accidental over pressuring of the actuator. The bonnet provides positive stroke reliability by use of spacers. Once proper stroke has been set, a constant stroke distance will be maintained throughout normal service life. All the Valveworks USA bonnet assemblies are shipped ready for installation on the valve.

INSTALLATION

1. Using your hand push the top of the bonnet stem (1) toward the bonnet ring (3). Caution: Do not push the threaded end of the bonnet stem past the nose of the bonnet ring. The gate end of the bonnet stem is now exposed for adaption of gate.
Note: Each gate valve manufacturer generally has a unique “adapted for” mechanism that then adapts to a bonnet. The use of a threaded gate nut on the “tee” style gate is most common.
To this purpose, the procedure will only exhibit a threaded style for assembly. However, in each case the gate valve manufacturer will supply proper assembly instructions for their design. The gate valve manufacturers “adapted for” valve components are generally body, gate, lifting nuts, studs, nuts, seat rings, seats, and miscellaneous items used in the closing mechanism. The body and closure mechanism are pressure tested to check the valve before shipment.
2. Insert lift nut (8) into the gate (7).
3. Thread the lift nut onto the exposed portion of the bonnet stem by turning the gate and lift nut in clockwise direction.
4. Rotate the gate and the lift nut slightly in either direction to bring the slot in the bonnet stem into alignment with the corresponding hole in the lift nut.
5. Drive the pin (9) through the gate pinhole and the stem slot.
6. Install and torque nuts (6) on the valve (10) body studs in accordance with instructions from valve manufacturer.
Note: Be sure the bonnet seal ring is installed in the bottom of the bonnet.
7. Carefully insert the gate into the valve body between the seats and slide bonnet (5) assembly down over the valve body studs.
8. Pull the bonnet stem upward with your hands to fully close the gate. (The piston can be threaded onto bonnet stem for better leverage. Do not use any other device or tool to lift the bonnet stem to the full closed position other than previously mentioned.)
9. The Valveworks USA bonnet assembly is now complete and ready to be assembled to the actuator.

Once the bonnet has been installed on a valve, it may be hydrostatically tested along with the valve and the actuator.

The testing and assembling must be performed by a qualified assembler and tester.
The valve, bonnet and actuator assembly must be tested in accordance with API 6A and 14D as applicable to the valve usage and service

PROPRIETARY BOOKLET OF VALVEWORKS USA. DO NOT REPRODUCE WITHOUT EXPLICIT PERMISSION.

VALVEWORKS USA
WHEN PRESSURE DEMANDS QUALITY®

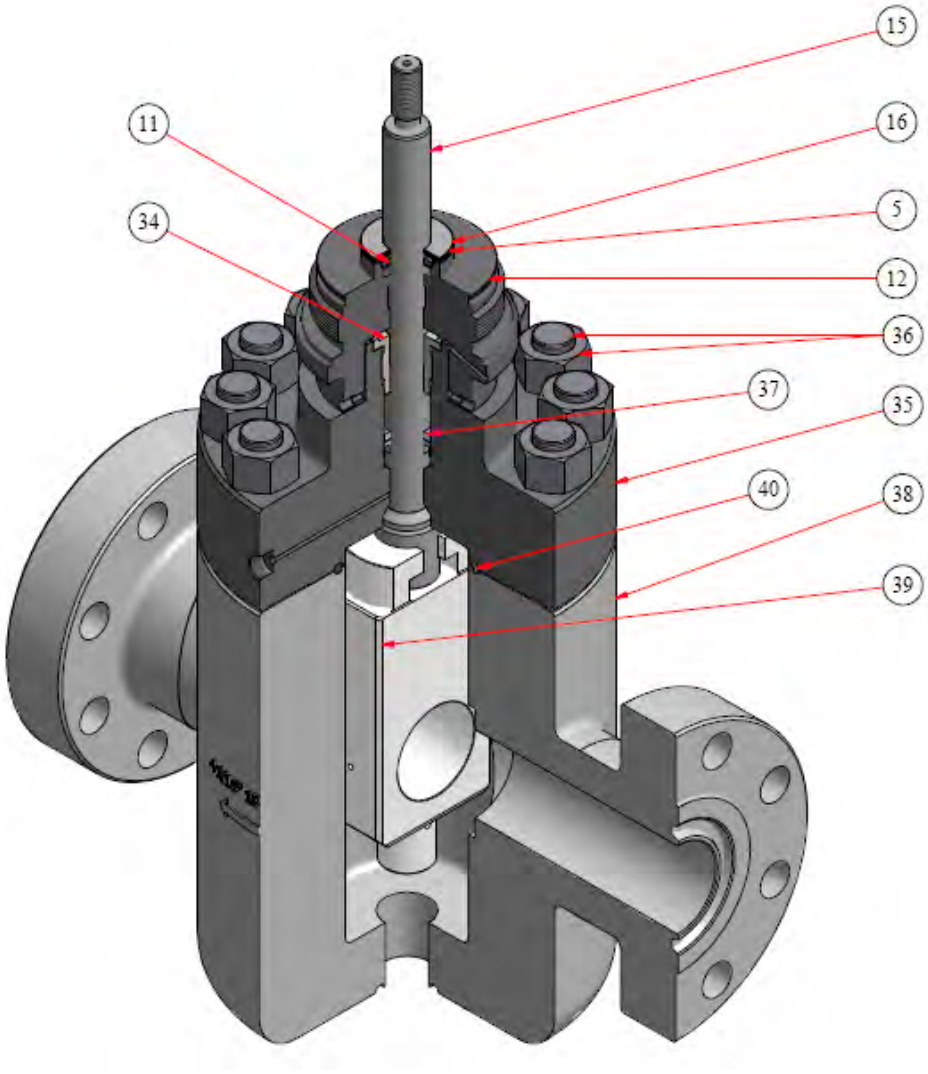

BONNET TO VALVE - BILL OF MATERIALS		
ITEM	QTY	DESCRIPTION
5	3	SHIM, COARSE, LOWER
11	1	SEAL RETAINER, LOWER
12	1	LOWER CAP
15	1	STEM, OPERATING
16	1	SHIM, FINE, LOWER
34	1	PACKING GLAND
35	1	BONNET, UPPER
36	24	STUD W NUT
37	1	PACKING
38	1	BODY
39	1	GATE, D/O FLOATING SLAB
40	1	UPPER BONNET SEAL RING

PROPRIETARY BOOKLET OF VALVEWORKS USA. DO NOT REPRODUCE WITHOUT EXPLICIT PERMISSION.

VALVEWORKS USA
WHEN PRESSURE DEMANDS QUALITY®

DRIFT SETTING OF BONNET TO VALVE

This section explains how to set the drift of the gate valve after assembly of the bonnet to the valve has been completed.
Note: Refer to illustration – of stroke adjustment.
1. After bonnet stem has been extended outward to the full closed position, place spacers over the bonnet stem and down onto the face of the bonnet ring.
2. Thread the piston in the end of the threaded bonnet stem by rotating in a clockwise direction until the piston bottoms out on the end of the bonnet stem.
3. Using both hands, push the piston downward until the piston stops on top of spacers.
4. Check the drift alignment by running the appropriate drift tool through the valve. If the gate is not aligned with the valve bore, pull the bonnet stem upward to the full closed position of the valve. Remove the piston and add or subtract spacers as necessary to compensate for drift error.
5. After successful completion of previous step, continue assembly of actuator to the bonnet.

ACTUATOR TO BONNET

The assembly of the actuator to the bonnet is the final procedure in the SSV assembly.
1. Do not remove the plastic plug from the threaded nipple on the actuator housing. This will prevent the actuator top shaft from dropping downward.
2. Remove bolt and lock open cap from actuator top plug.
3. Lower the actuator body over and down onto the bonnet assembly. Align and center the inside diameter of the actuator body housing to the outside diameter of the bonnet ring.
Note: If the actuator is being mounted in a horizontal position, support the weight of the actuator until it is fully installed
4. Remove the plastic plug from the pressure inlet and align tapped holes in the top plug and body housing of the actuator body to correctly position the pressure inlet nipple for proper tubing location.
Note: When installation of the actuator is at the well site, the pressure inlet can be rotated 360° for exact plumbing location.
5. Rotate the base plate ring in a counter clockwise direction toward the actuator body.
Note: Base plate ring must stand off from the actuator body a minimum of 1/32 of an inch.
6. Once the alignment of holes in the base plate ring is exact with the actuator body, install 8 bolts and tighten to 75 to 90 pounds of torque. A cross type tightening pattern is required.
7. Install proper inlet fitting into pressure inlet.
8. Connect a suitable hydraulic supply to the upper port of the actuator with the lower port open. Apply enough hydraulic pressure to stroke the actuator all the way down.
9. For the actuator to return to a fully closed position. Apply hydraulic pressure to the lower port with the upper port open.
10. Install the thread protector.
11. Assembly of a double-acting hydraulic actuator on a gate valve is now complete.

Before testing of the newly assembled actuator to the bonnet, check all actuator bolts, relief device and base plate ring bolts. There should be 8 bolts each for proper tightening to the lower housing.

All testing to the new actuator assembly must be performed by procedures outlined in API 6A; whichever is applicable to the new actuator assembly.

WARNING: Before Hydrostatic or Shell test of SSV assembly, LOCK OPEN CAP MUST BE INSTALLED. This also applies to any combination of singular valve or Assembled Trees.

PROPRIETARY BOOKLET OF VALVEWORKS USA. DO NOT REPRODUCE WITHOUT EXPLICIT PERMISSION.

VALVEWORKS USA
WHEN PRESSURE DEMANDS QUALITY®

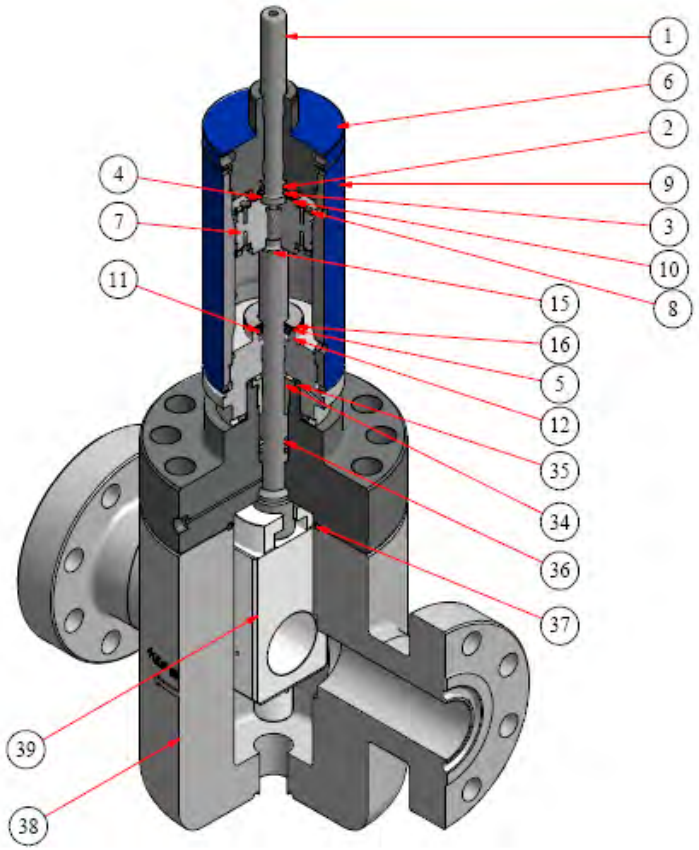

ACTUATOR TO BONNET - BILL OF MATERIALS		
ITEM	QTY	DESCRIPTION
1	1	TOP SHAFT
2	1	SEAL RETAINER, TOP
3	3	SHIM, COARSE, TOP
4	1	RETAINER PLATE
5	3	SHIM, COARSE, LOWER
6	1	TOP CAP
7	1	PISTON
8	2	SEAL FACE PLATE
9	1	HYDRAULIC HOUSING
10	1	SHIM, FINE, TOP
11	1	SEAL RETAINER, LOWER
12	1	LOWER CAP
15	1	STEM, OPERATING
16	1	SHIM, FINE, LOWER
34	1	PACKING GLAND
35	1	BONNET, UPPER
36	1	PACKING
37	1	UPPER BONNET SEAL RING
38	1	BODY
39	1	GATE, D/O FLOATING SLAB

PROPRIETARY BOOKLET OF VALVEWORKS USA. DO NOT REPRODUCE WITHOUT EXPLICIT PERMISSION.

VALVEWORKS USA
WHEN PRESSURE DEMANDS QUALITY®

OPERATION

Valveworks USA's double-acting hydraulic actuator is operated by application of adequate hydraulic pressure to the upper and lower side ports of the actuator. Hydraulic pressure on the internal piston will in turn force the bonnet stem to either open or close the valve, depending on whether the valve is direct acting or reverse acting. Proper amount of hydraulic supply needed per operation is found in the appendix.

Double-acting hydraulic actuators are very similar to single-acting hydraulic actuators; the main difference between them is absence of a spring in a DAH actuator. As an alternative, Valveworks USA DAH actuators have two ports which can be used either as a supply port or an exhaust port. These actuators are made-up of the following basic components in their construction: top shafts, top plugs, pistons, stems, wear bearings, seals and base plates with bolts for holding the actuators together. Furthermore, the Valveworks USA DAH actuators contain seals such as O-rings and polypacks. The seals provide strength; low friction; wear resistance; temperature changes; and the ability to form a tight seal; all of which make the seals capable of withstanding hydraulic industrial application requirements.

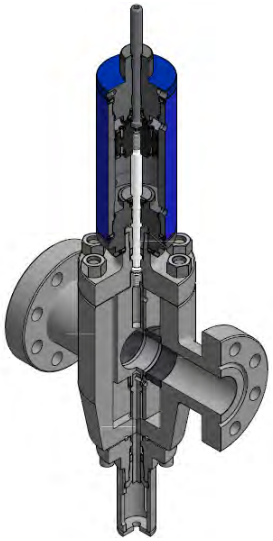

In a closed reverse acting valve, Hydraulic pressure is applied to the lower port of the actuator with the upper port open. This process moves the piston upwards until it is stopped by the bonnet ring. This in turn opens the valve.

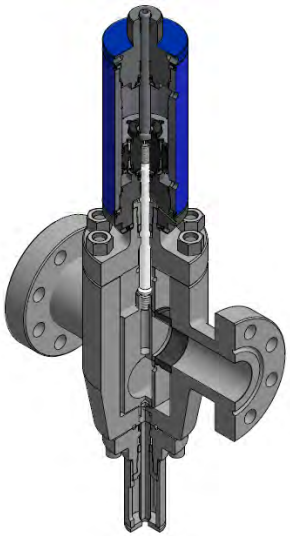

To close the valve, pressure is applied to the upper port of the actuator with the lower port open. This process moves the piston downwards until it is stopped by the bore of the stem making contact with the bonnet.

Depending on the size of the valve, the actuator stroke can be calculated using the distance between the bottom of the piston and the top of the bonnet ring with the gate closed for a reverse acting valve. Valveworks USA actuators contain stem spacers that assist in adjusting the stroke by adding/removing these spacers.

In a closed reverse acting valve having a pressure differential across the gate, the initial opening or cracking action might be quite rapid as the pressure differential is reduced. This is normal and neither causes damage or hinders valve function.

The remainder of the stroke can be expected to be normal. The closing motion should be smooth, without any hesitation, until the valve comes to the end of its travel. This closing action should be smooth, whether or not the actuator is operating a pressured or non-pressured valve, regardless of orientation.

PROPRIETARY BOOKLET OF VALVEWORKS USA. DO NOT REPRODUCE WITHOUT EXPLICIT PERMISSION.

VALVEWORKS USA
WHEN PRESSURE DEMANDS QUALITY®

TROUBLESHOOTING

PROBLEM	CAUSE	SOLUTION
CONTROL PRESSURE WILL NOT BUILD IN ACTUATOR	Damaged control line	Inspect control line for damage and/or leak fittings.
	Insufficient pressure in control line	Install gauge at pressure source to verify desired pressure available.
	Faulty pressure gauge.	Verify if pressure gauge is correctly calibrated.
	Leaking around bolted flange and/or bottom of actuator.	Replace and/or inspect seals on piston retainer nut in as per assembly instructions. Check piston retainer nut thread engagement to piston retainer plate for face seal contact. Check bolts on flange for proper torque. If leakage persists, replace piston seals.
ACTUATOR WILL NOT STROKE ON A VALVE WHETHER OR NOT VALVE IS PRESSURIZED	Insufficient pressure in control line	Check pressure from source. Consult control pressure information from the information chart per size valve application (appendix).
	Bonnet to bonnet stem binding	Consult appropriate maintenance and operating instructions for bonnet.
	Valve and/or seals improperly installed	Remove actuator per instructions in this manual. Remove bonnet per instructions from bonnet manufacturer's maintenance and operating manual. Repair and/or replace valve components in accordance with valve manufacturer's instruction manual.
	Debris in valve and actuator vents	Remove actuator per instructions in this manual. Remove bonnet per instructions from bonnet manufacturer's maintenance and operating manual. Clean debris from valve body.
ACTUATOR WILL NOT ATTACH TO BONNET ASSEMBLY.	Debris in body housing.	Re-inspect body housing and bonnet ring.
	Bonnet stem is not fully extended and back seated.	Grasp stem in bonnet and pull to full extension properly back seating the stem.
	Bad or wrong thread on bonnet stem and piston.	Check threads on bonnet stem and piston for burrs, nicks, dings and debris. Check size and thread pattern for proper engagement.
ACTUATOR WILL NOT STROKE TO "FULL CLOSED" OR FAIL SAFE" POSITION.	Gate and seats are improperly installed causing excessive friction.	Remove actuator per instructions in this manual. Manually push and/or pull bonnet stem to determine severity of binding. If severe, clean and inspect gate and seats for wear/abrasion. Replace if signs of galling are observed.
	Excessive seal frication due to loss of lubrication in bonnet/valve.	Remove actuator per instructions in this manual. Manually push and/or pull bonnet stem to determine severity of binding. Remove bonnet per instructions from bonnet manufacturer's maintenance and operating manual. Clean, inspect, and lubricate.
ACTUATOR WILL NOT DRIFT AFTER ASSEMBLY OF BONNET TO VALVE	Wrong number of spacers installed.	Remove actuator per instructions. Check number of spacers.
	Wrong spacer ring per valve size.	Repeat actuator removal and check for proper spacer ring per bill of material.
	Improper gate to stem engagement.	Remove actuator and bonnet as per instruction manual. Adjust engagement per valve in manufacturer's instructions and/or drawings.

PROPRIETARY BOOKLET OF VALVEWORKS USA. DO NOT REPRODUCE WITHOUT EXPLICIT PERMISSION.

VALVEWORKS USA
WHEN PRESSURE DEMANDS QUALITY®

PHYSICAL DIMENSIONS

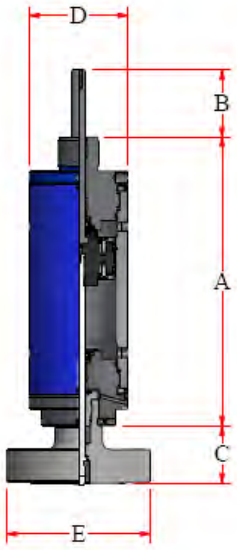

SERIES	HEIGHT (A)	DIMENSION (B)
550	21.46	7.28
650	22.70	8.45
850	27.23	10.50

The dimensions B, C and E vary for different series of DAH actuators and different valve sizes chosen to accompany them.

PROPRIETARY BOOKLET OF VALVEWORKS USA. DO NOT REPRODUCE WITHOUT EXPLICIT PERMISSION.

VALVEWORKS USA

WHEN PRESSURE DEMANDS QUALITY®

1650 SWAN LAKE ROAD
BOSSIER CITY, LA USA 71111

PHONE	318-425-0266
FAX	318-425-0934
TOLL FREE	888-425-0266
EMAIL	SALES@VWUSA.US
WEBSITE	WWW.VALVEWORKSUSA.COM

PROPRIETARY BOOKLET OF VALVEWORKS USA. DO NOT REPRODUCE WITHOUT EXPLICIT PERMISSION.