VALVEWORKS USA

WHEN PRESSURE DEMANDS QUALITY™

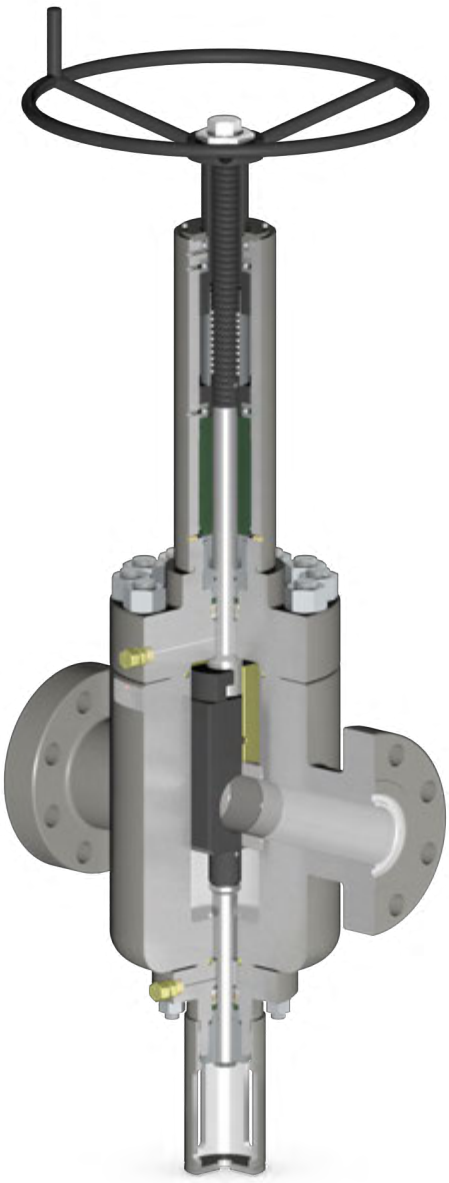

MODEL FM2 SERVICE AND OPERATION MANUAL

PROPRIETARY BOOKLET OF VALVEWORKS USA. DO NOT REPRODUCE WITHOUT EXPLICIT PERMISSION.

SALES@VWUSA.US WWW.VALVEWORKSUSA.COM

VALVEWORKS USA
WHEN PRESSURE DEMANDS QUALITY™

INTRODUCTION

In appreciation to our customer for purchasing our product, we have prepared this Operation Manual to assist you in the Operation, Maintenance, Assembly and Installation of the Valveworks USA API 6A Model FM2 Gate Valve. We encourage following the recommendations in this booklet to attain the best possible service from our product, which is designed and proven to offer the service one can expect of a quality product.
To contact a representative for more specific information pertaining to a special problem:

VALVEWORKS USA
WHEN PRESSURE DEMANDS QUALITY™
1650 SWAN LAKE ROAD
BOSSIER CITY, LA USA 71111

PHONE	318-425-0266
FAX	318-425-0934
TOLL FREE	888-425-0266
EMAIL	SALES@VWUSA.US
WEBSITE	WWW.VALVEWORKSUSA.COM

QUALITY

Valveworks USA management and employees are committed to continually improve the effectiveness of our quality management system to produce a quality assured product which meets or exceeds our customer's expectations and requirements.

SAFETY

Caution must be taken as to the surrounding area and its potential dangers of projectiles.
Pressure kills! Even a loose, stand alone valve may contain trapped pressure which will turn any component into a projectile missile when disassembled, causing injury or death. Never stand over a component or in its path of release during assembly. Always operate the valves from the open to close position slowly releasing trapped pressure. Always remove fittings first, taking extreme caution to their potential danger as a projectile. If the valve is frozen and can not be operated, take extreme caution to the disassembly of the components.
Weighted blankets or protective screens and shields should be utilized. Caution should be taken when handling components during disassembly and assembly, as most components are heavy, greasy, hard to handle and have edges which can cause injury. Always be cautious of how the valve is positioned and standing. Be sure the valve is secured in position so there is no possible chance of tipping over. Never apply test pressure above the manufacturers rated working pressure. The shell test pressure above the working pressure has already been tested by the manufacturer and is not required after the initial assembly test of the valve. The manufacturer has already verified the quality of the valve shell body components and will void the warranty from the manufacturer if the valve is pressure tested above the rated working pressure indicated for the valve. Always wear steel toes shoes, hard hat, eye and ear protection while performing repairs.

PROPRIETARY BOOKLET OF VALVEWORKS USA. DO NOT REPRODUCE WITHOUT EXPLICIT PERMISSION.

VALVEWORKS USA
WHEN PRESSURE DEMANDS QUALITY™

TABLE OF CONTENTS

APPLICATIONS	4
TEMPERATURE RATING	4
TRIM CHART	4
ORDERING INFORMATION	5
OPERATION	5
ASSEMBLY DRAWING	6
BILL OF MATERIALS	7-8
DISASSEMBLING THE VALVE	9-12
BACKSEATING PROCEDURE	13-14
PERIODIC MAINTENANCE	14-15
PROCEDURE TO VENT OR DRAIN	16
TROUBLESHOOTING	17
MAINTENANCE INTERVALS	17
TEST PROCEDURE	18
HYDROSTATIC BODY TEST	19
HYDROSTATIC SEAT TEST	20
VISUAL INSPECTION	21
FIELD HOOK-UP INSTRUCTIONS	21

PROPRIETARY BOOKLET OF VALVEWORKS USA. DO NOT REPRODUCE WITHOUT EXPLICIT PERMISSION.

VALVEWORKS USA
WHEN PRESSURE DEMANDS QUALITY™

APPLICATIONS

Valveworks USA FM2 gate valve unit can be applied to the following sizes and working pressures.

APPLICATION	OPTIONS AVAILABLE
GATE VALVE SIZE	4-1/16”
MAXIMUM ALLOWABLE WORKING PRESSURE (MAWP)	15M
TEMPERATURE RANGE	-60°C TO 121°C (-75°F TO 250°F)

TEMPERATURE RATING

TEMPERATURE CLASSIFICATION	OPERATING RANGE			
	°C		(°F)	
K	-60	82	-75	180
L	-46	82	-50	180
N	-46	60	-50	140
P	-29	82	-20	180
S	-18	60	0	140
T	-18	82	0	180
U	-18	121	0	250
V	2	121	35	250

TRIM CHART

MATERIAL CLASS	MINIMUM MATERIAL REQUIREMENTS	
	BODY, BONNET, END AND OUTLET CONNECTIONS	PRESSURE-CONTROLLING PARTS, STEMS, AND MANDREL HANGERS
AA - General Service	Carbon or low-alloy steel	Carbon or low-alloy steel
BB - General Service	Carbon or low-alloy steel	Stainless steel
CC - General Service	Stainless steel	Stainless steel
DD - Sour Service [a]	Carbon or low-alloy steel [b]	Carbon or low-alloy steel [b]
EE - Sour Service [a]	Carbon or low-alloy steel [b]	Stainless steel [b]
FF - Sour Service [a]	Stainless steel [b]	Stainless steel [b]
HH - Sour Service [a]	CRAs [b]	CRAs [b]

[a] As defined by NACE MR0175.
[b] In compliance with NACE MR0175.

As shown by API-6A. For specific details, consult Valveworks USA.

PROPRIETARY BOOKLET OF VALVEWORKS USA. DO NOT REPRODUCE WITHOUT EXPLICIT PERMISSION.

VALVEWORKS USA
WHEN PRESSURE DEMANDS QUALITY™

ORDERING INFORMATION

The following information should be provided with any request for quote or order placement of Valveworks USA FM2 Gate Valves:

- **API 6A Requirements (PR-PSL)**
- **Temperature Rating (API 6A)**
- **Material (API 6A)**
- **Any Special Test Requirements**
- **Any Special Material Requirements**
- **Any Special Coating or Protection Requirements**
- **Other Specifications and/or Certifications**

OPERATION

The Valveworks USA Model FM2 gate valves are Ball Screw operated valves. The gate of the MODEL FM2 Valve is a one piece slab gate that uses two floating seats to generate a highly reliable seal. The slab gate eliminates the chance of trapping pressure within the body cavity which can cause pressure locking.

- **Fully open the valve before installing or shipping. The sealing area of the gate, in the full open position, is protected by the body and is less likely to be damaged.**
- **Do not remove the molybdenum disulfide coating from internal parts. This coating serves as a lubricant and corrosion inhibitor.**
- **To hydrostatically test the valve body to full API test pressure, the valve *must be* in a partially open position. When testing the valve in the closed position (seat test) *do not* exceed the working pressure stamped on the valve identification plate.**
- **During storage always leave the valve in the *fully opened or fully closed* position. This will prevent damage to the sealing area of both the gate and seats.**
- **Always remove the valve from service before work is performed on the stem bearings.**
- **When lubricating the body do not exceed the maximum API working pressure stamped on the identification plate.**
- **The valve should be fully closed or fully opened during lubrication of the body or seats. Seat lubrication pressures should not exceed the maximum allowable API test pressure.**

This method of operation will prevent damage to the sealing surfaces of the gate and seats, and will increase the life of the valve.

PROPRIETARY BOOKLET OF VALVEWORKS USA. DO NOT REPRODUCE WITHOUT EXPLICIT PERMISSION.

VALVEWORKS USA
WHEN PRESSURE DEMANDS QUALITY™

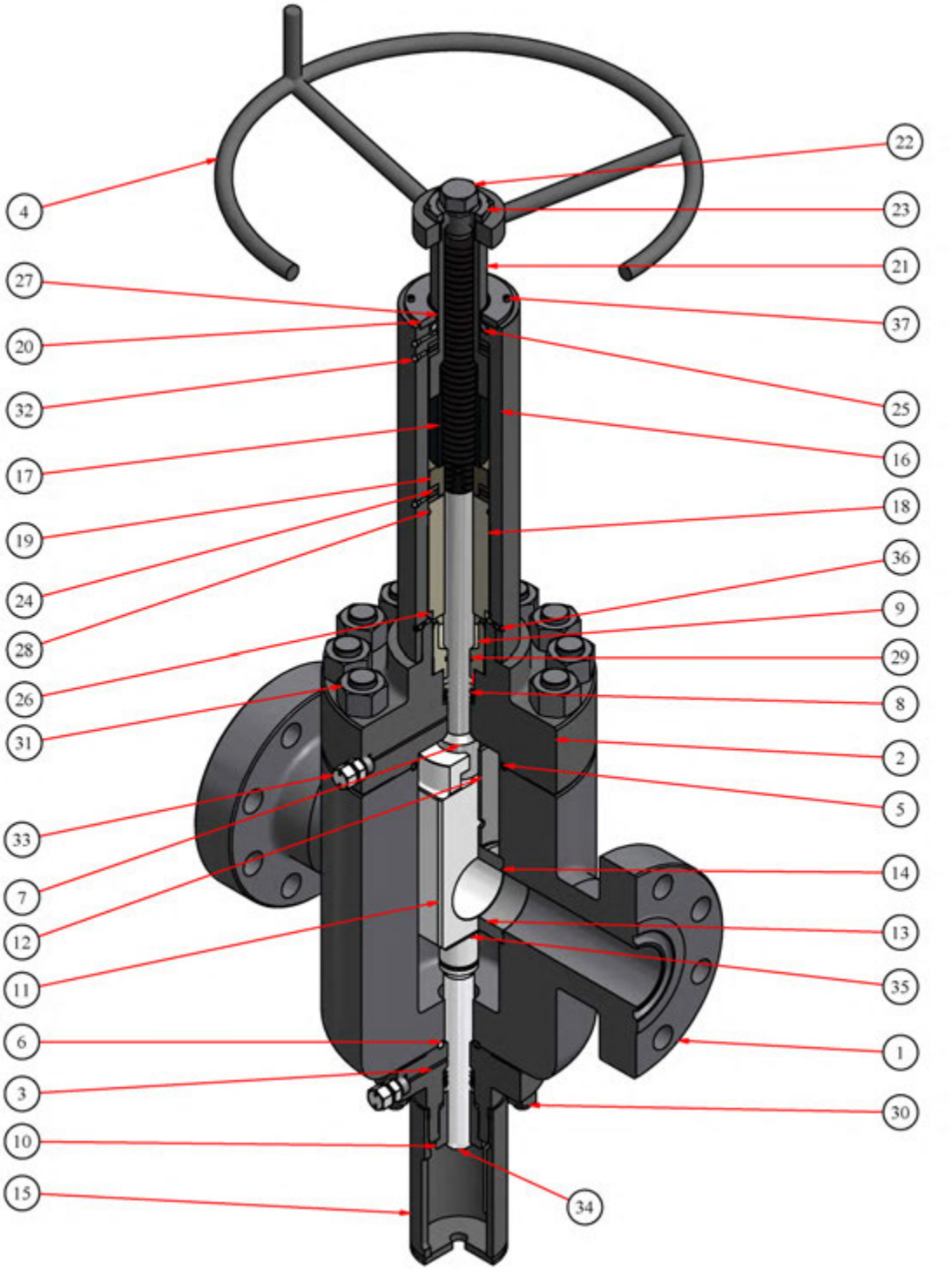

MODEL FM2

(HANDWHEEL OPERATED)
OPERATION: BI-DIRECTIONAL - SLAB GATE
TO OPEN AND CLOSE:
BACKOFF HANDWHEEL 1/4 TURN
(GATE SHOWN IN OPEN POSITION)

PROPRIETARY BOOKLET OF VALVEWORKS USA. DO NOT REPRODUCE WITHOUT EXPLICIT PERMISSION.

VALVEWORKS USA
WHEN PRESSURE DEMANDS QUALITY™

MODEL FM2 - BILL OF MATERIALS		
ITEM	DESCRIPTION	QTY
1	BODY	1
2	BONNET	1
3	BONNET, LOWER	1
4	HANDWHEEL	1
5	UPPER BONNET SEAL RING	1
6	RING GASKET, LOWER	1
7	STEM, OPERATING	1
8	PACKING, OPTI-SEAL	2
9	UPPER PACKING RETAINER	1
10	PACKING RETAINER	1
11	GATE, D/O FLOATING SLAB	1
12	RETAINER PLATE	2
13	BODY BUSHING	2
14	SEAL, BODY BUSHING	2
15	STEM PROTECTOR	1
16	HOUSING, BALL SCREW	1
17	BALL SCREW, LH THREAD	1
18	BEARING SPACER, LOWER	1
19	BEARING SPACER, UPPER	1
20	COVER PLATE	1
21	STEM ADAPTER	1
22	GLAND, BACKSEAT	1
23	HANDWHEEL NUT	1
24	BEARING, INTERNAL	2
25	BEARING, EXTERNAL	1
26	SNAP RING, SPIROLOX	1
27	ROD WIPER	1
28	O-RING	1
29	O-RING	1
30	STUDS W/ NUT (UPPER)	12
31	STUDS W/ NUT (LOWER)	8
32	ALEMITE GREASE FITTING	3
33	AUTOCLAVE FITTING	2
34	STEM, BALANCE	1
35	ROLL PIN	1
36	SET SCREW	4
37	CAP SCREW	4

PROPRIETARY BOOKLET OF VALVEWORKS USA. DO NOT REPRODUCE WITHOUT EXPLICIT PERMISSION.

VALVEWORKS USA
WHEN PRESSURE DEMANDS QUALITY™

The last two digits in the part number vary with "X" Material Type and "Y" Coating. The table below gives the different available material types and coatings. Please refer to the valve tag to know the material type and coating on the valve parts.

"X"	MATERIAL TYPE	"Y"	COATING
1	4130	0	NONE; PHOSPHATE, MOLY, STANDARD PAINT/COATING, POWDER COAT
1A	4140		
1B	1040		
1C	1018		
1D	1020		
1E	SA285-C	1	NITRIDE QPQ-PHOSPHATE; EXCEPTION - FC BODY BUSHING - DO NOT NITRIDE
1F	1026		
2	410SS FORGED		
2A	S42400		
3	174SS		
3A	NITRONIC 50	2	HARDFACE-STELLITE #6 SPRAY & FUSE
4	316SS		
4A	316/304SS		
4B	304SS	3	HARDFACE - TUNGSTEN CARBIDE
5	BRONZE		
6	INCONEL 718		
6A	INCONEL 725	4	HARDFACE - COLMONOY #5
6B	INCONEL X750		
7	MONEL	5	ELECTROLIS NICKEL
8	A487-4D		
8A	A487-4C	6	WELD ON HARDFACE
8B	CA15		
8C	CF8M	7	ZINC PLATE
8D	CF3M	8	XYLAN COATING
8E	CA6NM	9	(4130) INCONEL 625 CLAD
9	STELLITE #6		
9A	PLASTIC	9A	(4130)SS-316-RING GROOVE
9B	STELLITE #3		

PROPRIETARY BOOKLET OF VALVEWORKS USA. DO NOT REPRODUCE WITHOUT EXPLICIT PERMISSION.

VALVEWORKS USA
WHEN PRESSURE DEMANDS QUALITY™

DISASSEMBLING THE VALVE



1. (Horizontal Orientation) Unscrew and remove the Handwheel Nut with a crescent wrench.

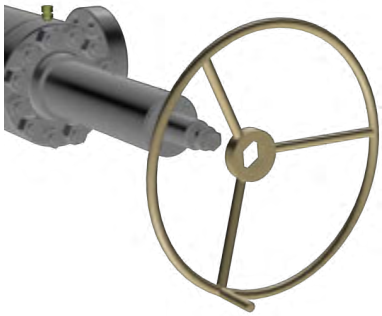

2. Remove the Handwheel.

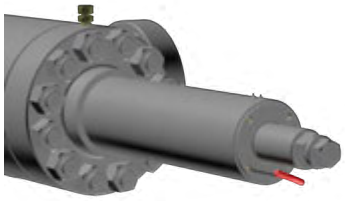

3. Unscrew and remove Cover Plate Screws with an allen wrench.

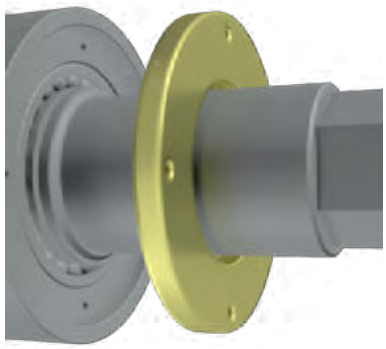

4. Remove the Cover Plate.
Note: Use a wire brush to clean paint off the stem adapter.

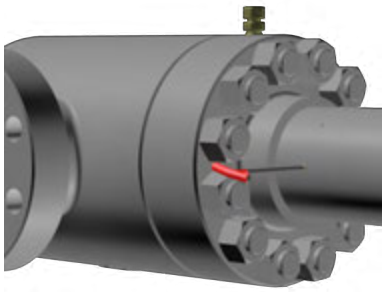

5. Unscrew and remove Set Screws on the Ball Screw Housing.

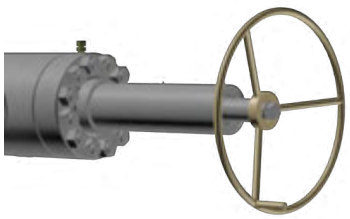

6. Replace the Handwheel.

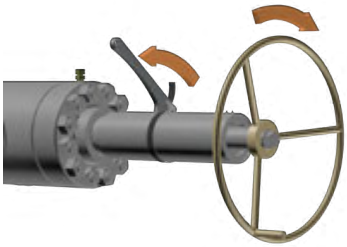

7. Rotate handwheel clockwise while unscrewing the Ball Screw Housing (counter-clockwise).

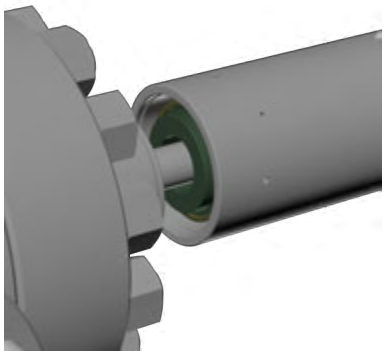

8. Rotate the handwheel counter-clockwise to back up the Ball Screw Housing enough to access the Spirolox Retainer Ring.

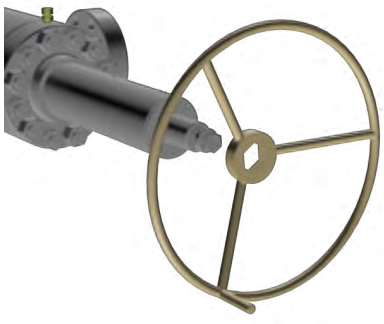

9. Remove the Handwheel.

PROPRIETARY BOOKLET OF VALVEWORKS USA. DO NOT REPRODUCE WITHOUT EXPLICIT PERMISSION.

VALVEWORKS USA
WHEN PRESSURE DEMANDS QUALITY™

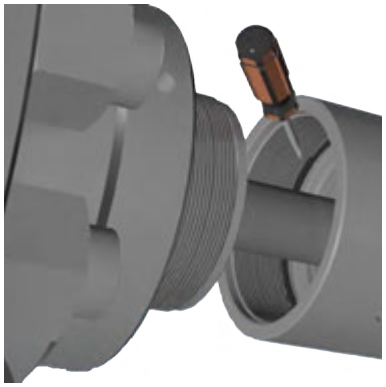

10. Remove the Retainer Ring with a screwdriver.

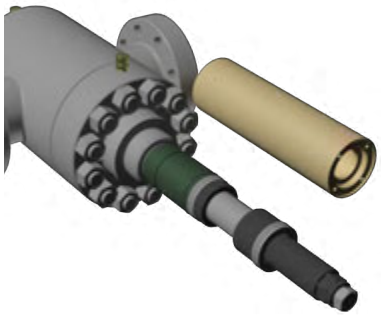

11. Remove the Ball Screw Housing.

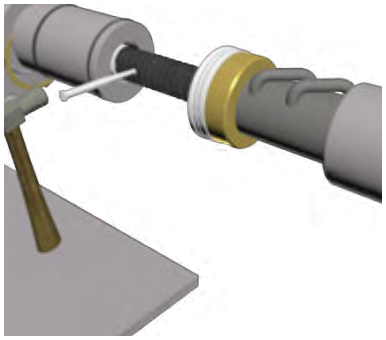

12. Remove the Roll Pin to disengage the Ball Screw.



13. Remove the Ball Screw Assembly.



14. Remove the Bearing Sleeve and Retainer Ring.



15. (Vertical Orientation) Unscrew and remove the Packing Retainer.



16. Unscrew and remove the Bonnet Nuts using a torque wrench.



17. Remove the Upper Bonnet.



18. This gives access to the Bonnet Seal Ring, Gate, and Seats.

PROPRIETARY BOOKLET OF VALVEWORKS USA. DO NOT REPRODUCE WITHOUT EXPLICIT PERMISSION.

VALVEWORKS USA
WHEN PRESSURE DEMANDS QUALITY™



19. Remove the Gate and Stem Assembly.

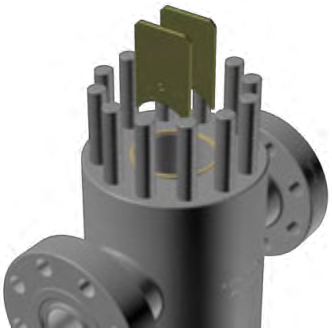

20. Remove the Gate Guides.

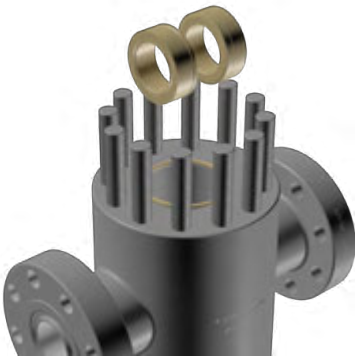

21. Remove the Seats.

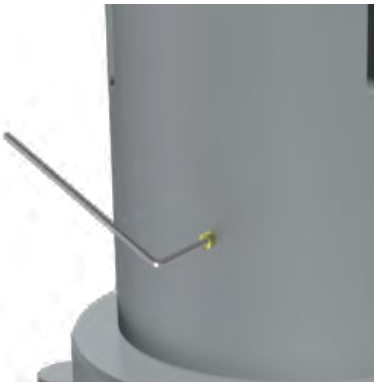

22. Unscrew and remove Set Screw located on the Stem Protector with an allen wrench.



23. Unscrew and remove the Stem Protector.

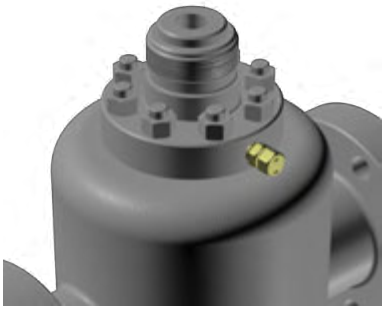

24. If required, the Lower Bonnet may be removed. Follow the same steps used to remove the Upper Bonnet.

PROPRIETARY BOOKLET OF VALVEWORKS USA. DO NOT REPRODUCE WITHOUT EXPLICIT PERMISSION.

VALVEWORKS USA
WHEN PRESSURE DEMANDS QUALITY™

BACKSEATING PROCEDURE - OPERATING STEM



1. Remove the Backseat Gland.

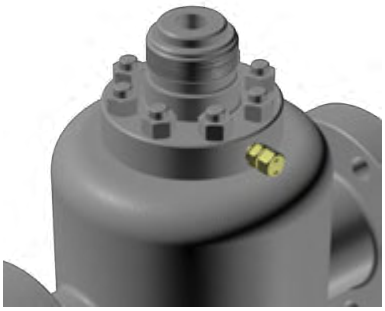

2. Remove the Stem Protector.

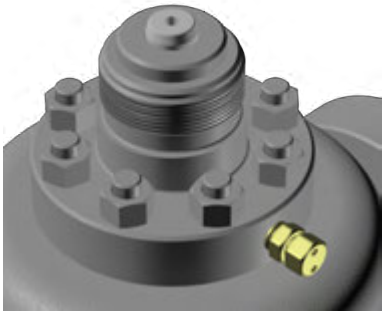

3. Operate the valve to the fully open position and hold. The balance stem should be mostly into the lower bonnet.



4. Install the backseat engagement tool and thread on the cap until it bottoms out. Do not over tighten the cap.

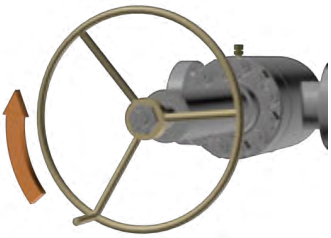

5. Have a second operator turn the hand wheel forcing the backseat to engage and hold. Do not apply excessive force to the hand wheel. No “cheater pipes” are needed.



6. While the second operator holds the backseat engaged, thread the supplied bolt into the cap.



7. Using a wrench to tighten the bolt down to lock the stem/backseat into position. Do not over tighten the bolt. (Approximately 50 ft*lbf)

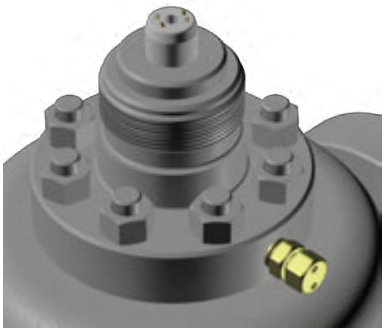

Note: Use fine sand paper to remove any burrs left on the balance stem. Additionally, injecting grease into the grease port helps pushing the packing out of the bonnet.



9. Use a bleeder style fitting to relieve pressure below the packing. Be cautious of well gases! (ie:H_2S) It is up to the operator to know what is in their wells.

PROPRIETARY BOOKLET OF VALVEWORKS USA. DO NOT REPRODUCE WITHOUT EXPLICIT PERMISSION.

VALVEWORKS USA
WHEN PRESSURE DEMANDS QUALITY™

BACKSEATING PROCEDURE - BALANCE STEM



1. Remove the Backseat Gland.

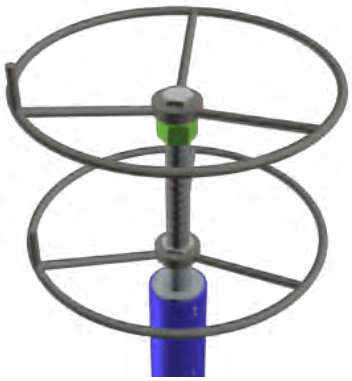

2. Carefully insert the FM Series Backseat Tool about 1 inch. Be sure the supplied nut is threaded under the hand wheel as shown.



3. Move the valve to the closed position and ensure the backseat is tightly held engaged. (Bottom View Shown)



4. While one operator holds the backseat engaged, have another operator thread in the backseat tool and tighten the backseat tool hand wheel. Do not over tighten the tool.



5. While holding both hand wheels tight, tighten the lock nut down to hold everything engaged.



6. The backseat is now engaged. Use a bleeder style fitting to relieve the pressure.
Note: All warnings of the operating stem backseating procedure apply here as well.

PERIODIC MAINTENANCE

The Model FM2 gate valves are non-lubricated valves, in that they do not require the injection of lubricants or sealants to effectively seal. However, to prevent corrosion and excessive wear a normal amount of lubrication is recommended to extend the life and serviceability of the valve. Valveworks USA API Gate Valves at 15,000 PSI W.P. are supplied with 9/16” 17-4SS autoclave fitting connections.

PROPRIETARY BOOKLET OF VALVEWORKS USA. DO NOT REPRODUCE WITHOUT EXPLICIT PERMISSION.

VALVEWORKS USA
WHEN PRESSURE DEMANDS QUALITY™

MAINTENANCE TOOLS

To perform normal maintenance and lubrication, the following tools are recommended:



Grease pump with adapter and coupling



Safety pressure releasing tool

BALL SCREW BEARING LUBRICATION

Valveworks USA FM2 valves are equipped with alemite hydraulic type 1/8" NPT bonnet grease fittings. Ball Screw bearing lubrication is accomplished through this fitting using a standard type grease gun. Any good grade No. 3 grease is recommended for this lubrication. Ball screw bearings normally do not require great amounts of grease. If too much lubrication should occur, excess grease will flow around the stem to the atmosphere.

CAUTION:

If bearings should need to be changed, the valve must be removed from service. During pressurized valve body lubrication, pressure applied to the valve body with the grease gun must not exceed the maximum working pressure of the valve being lubricated.

VENTING OR DRAINING A VALVE

Most products contain a certain amount of water, line scale, sediment and other foreign matter which tend to accumulate in the valve body. A regular draining program will increase the life of a valve against damage caused by:

- **Water freezing in the body cavity, causing damage to the body.**
- **An accumulation of foreign matter in the lower part of the body that could prevent the valve from fully closing; resulting in a throttling action that may cause inefficient sealing.**
- **Foreign matter trapped in the body may become lodged between the sealing surfaces of the gate and seats, resulting in scored or damaged sealed.**
- **Venting a Model FM2 valve is a positive method of checking the sealing ability of the gate and seats. If the body vents down to zero pressure with the valve in fully closed position, this is definite indication that sealing surfaces are in good condition.**

PROPRIETARY BOOKLET OF VALVEWORKS USA. DO NOT REPRODUCE WITHOUT EXPLICIT PERMISSION.

VALVEWORKS USA
WHEN PRESSURE DEMANDS QUALITY™

PROCEDURE TO VENT OR DRAIN

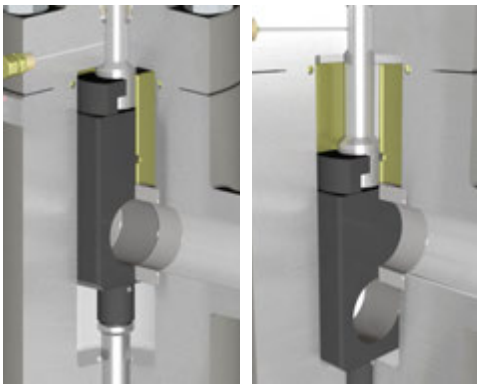

1. The gate must be fully open (left) or closed (right).

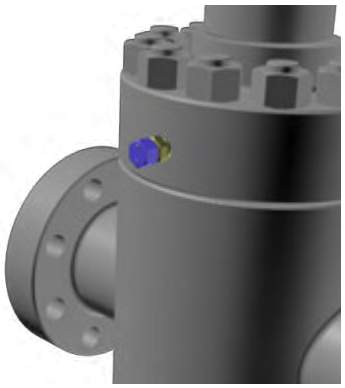

2. Remove the safety cap from either body grease fitting.



3. Attach the pressure release tool.

CAUTION:

Remove the safety cap slowly to allow the ball check to sufficiently seal and avoid uncontrolled venting. Should the ball check fail to seal properly, pressure will continue to blow through the safety cap orifices. You should then retighten the safety cap screw and vent through the other body grease fitting. Once the body pressure is bled to zero you should then attempt to repair the leaking ball check.



4. Screw the stem of the releasing tool into the fitting forcing the ball check off its seat. The valve will vent and drain once the ball check is unseated.

A program of regular draining and body venting is the most positive way to prevent problems caused by foreign matter in the valve. However, if a regular draining program cannot be followed, it is recommended that valves be drained after the following operations:

- **After a well has come in and has been cleaned.**
- **After a mudding operation.**
- **After a cementing operation.**
- **Anytime the valve seems hard to operate by hand and will not fully open or close by the required number of hand wheel turns.**
- **When the valve is hard to operate from the fully open or fully closed position because it is "pressure locked" or "Iced-up".**

PROPRIETARY BOOKLET OF VALVEWORKS USA. DO NOT REPRODUCE WITHOUT EXPLICIT PERMISSION.

VALVEWORKS USA
WHEN PRESSURE DEMANDS QUALITY™

"ICED-UP" **is a condition caused by a restriction in the flow or a differential in the pressure of gas flow at high pressure, which produces extremely low temperatures.**

These restrictions or differentials in pressure may be caused by throttling through a valve. This happens by leakage of a closed valve or leakage through the stem packing. Valves in service on gas containing hydrates or in fresh water service, which are exposed to low external temperatures can also get "iced-up". In this case it is advisable to inject alcohol or glycol into the valve body through the drain fitting to combat these conditions.

The same procedures are used for injecting alcohol or glycol as are used for valve body lubrication. Do not operate the valve immediately after injecting as these fluids should be retained in the body to perform the Antifreeze effect.

TROUBLESHOOTING

PROBLEM	*CAUSE*	*SOLUTION*
Leakage when closed	*Seats*	*Disconnect from service and check for the condition of the seats.*
Leakage when open through body/bonnet connection	*Bonnet Seal Ring*	*Disconnect from service and replace the bonnet seal ring.*
Leakage when partially open thru top of bonnet	*Packing*	*Disconnect from service and replace the packing.*
Leakage at flange	*Flange Seal Ring*	*Disconnect from service and replace the flange seal ring.*

MAINTENANCE INTERVALS

PROCEDURE	*RECOMMENDED INTERVAL*
Vent or Drain	*See Page 16*
Cycle Open to Close	*Semi-Annually*
Disconnect and Test	*Annually*

PROPRIETARY BOOKLET OF VALVEWORKS USA. DO NOT REPRODUCE WITHOUT EXPLICIT PERMISSION.

VALVEWORKS USA
WHEN PRESSURE DEMANDS QUALITY™

TEST PROCEDURE



1. Grease and insert a ring joint into the body flange.

Note: Refer to the end of the manual for studded outlet to prepare for testing.



2. Be sure that the test flange has a tightened grease fitting, all of its studs, and a nut on each with all of the nuts on the grease fitting side.



3. Align the test flange studs with the body flange holes. Then, push the test flanges, its studs, and their hex nuts onto the body flange.

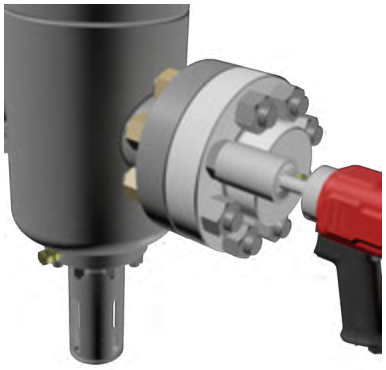

4. Screw each hex nut on the vacant side of a stud until all of the studs have a nut on the test flange and the valve flange.

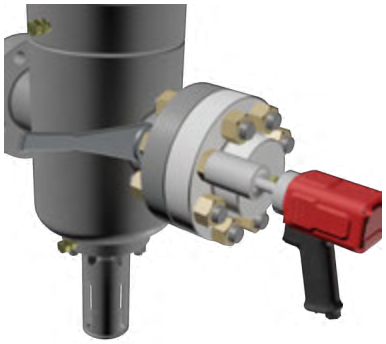

5. Tighten the hex nuts on the test flange side with a torque wrench until they are tight.



6. A finished flange shown.



7. Repeat steps 1-5 for the opposite flange.

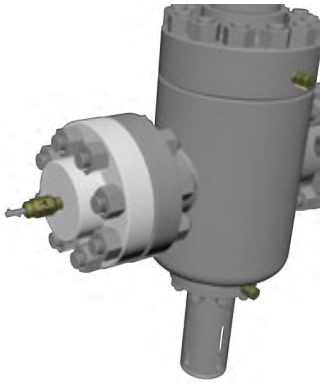

8. Remove the grease fitting cap from one test flange and attach a pressure release tool.



9. Remove the grease fitting cap from the opposite test flange and attach the flow line.

PROPRIETARY BOOKLET OF VALVEWORKS USA. DO NOT REPRODUCE WITHOUT EXPLICIT PERMISSION.

VALVEWORKS USA
WHEN PRESSURE DEMANDS QUALITY™

HYDROSTATIC BODY TEST



1. With the pressure release tool and flow line connection tight, open the valve partially. Apply the test pressure for at least (3) minutes.

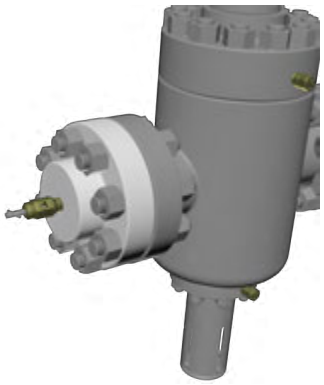

2. Bleed off the pressure until it's reduced to zero, and close the pressure release tool.

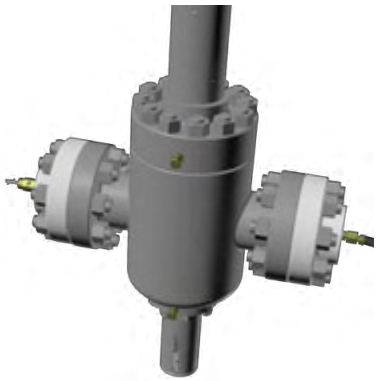

3. Raise the pressure back up to the test pressure for the secondary pressure-holding period of at least (3) minutes.

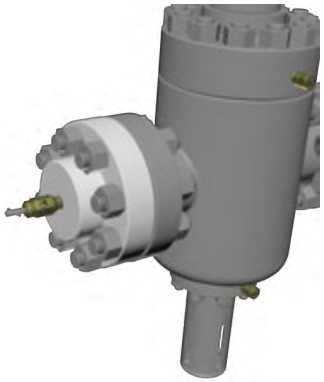

4. Bleed off the pressure until it's reduced to zero. Then, close the pressure release tool and the valve.

The hydrostatic body test pressure shall be determined by the rated working pressure of the equipment. Hydrostatic test pressures shall be as given as tabulated below.

HYDROSTATIC BODY TEST PRESSURE, PSI (MPa)

WORKING PRESSURE RATING-PSI (MPa)		END AND OUTLET CONNECTIONS-PSI (MPa)		LINE PIPE AND TUBING THREADS-PSI (MPa)	
2,000	(13,8)	4,000	(27,6)	4,000	(27,6)
3,000	(20,7)	6,000	(41,4)	6,000	(41,4)
5,000	(34,5)	7,500	(51,7)	7,500	(51,7)
10,000	(69,0)	15,000	(103,4)	15,000	(103,4)
15,000	(103,4)	22,500	(155,2)	-	-
20,000	(138,0)	30,000`	(207,0)	-	-

PROPRIETARY BOOKLET OF VALVEWORKS USA. DO NOT REPRODUCE WITHOUT EXPLICIT PERMISSION.

VALVEWORKS USA
WHEN PRESSURE DEMANDS QUALITY™

HYDROSTATIC SEAT TEST

- With the valve closed, apply the rated working pressure.
- Hold and monitor at that pressure for at least (3) minutes.
- Open the valve, and bleed off the pressure until it's reduced to zero. Then, close the valve and the pressure release tool.
- Repeat the steps above.

Switch the sides of your flow and pressure release connections, bleed off the new pressure release side, and repeat steps above to perform a seat test on the new flow side.

The valve is acceptable if no leakage is visible during the holding period.

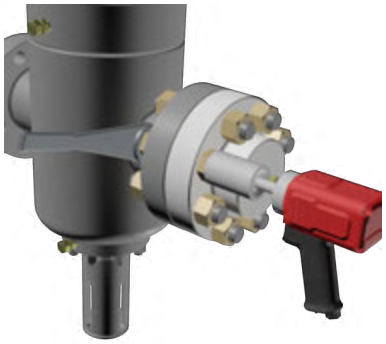

1. While holding the hex nuts on the body flange, loosen each of the test flange hex nuts.



2. After removing the body flange hex nuts, you can remove the test flange, its studs, and their hex nuts.



3. Pass a drift mandrel through the valve bore after the valve has been assembled, operated, and pressure tested.



4. Remove the upper bonnet grease fitting cap, and attach a flow line from the grease pump to the grease fitting as shown above.

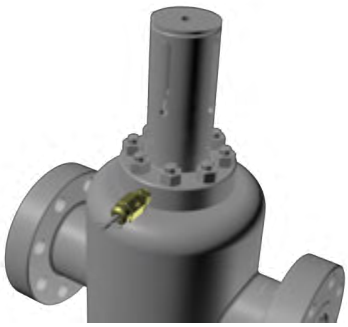

5. Remove the lower bonnet grease fitting cap, and attach a pressure release tool as shown above.

PROPRIETARY BOOKLET OF VALVEWORKS USA. DO NOT REPRODUCE WITHOUT EXPLICIT PERMISSION.

VALVEWORKS USA
WHEN PRESSURE DEMANDS QUALITY™

VISUAL INSPECTION

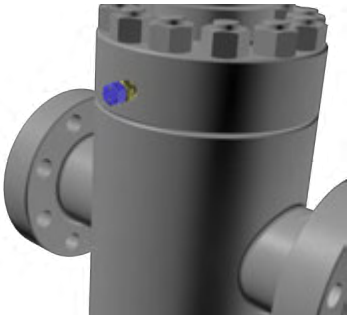

1. Be sure the upper bonnet grease fitting cap is on and tight.



2. Be sure the lower bonnet grease fitting cap is on and tight.

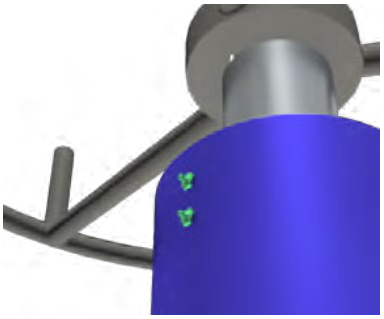

3. Be sure the Alemite fittings are on and tight.



4. Be sure the Hand wheel Nut is tight.

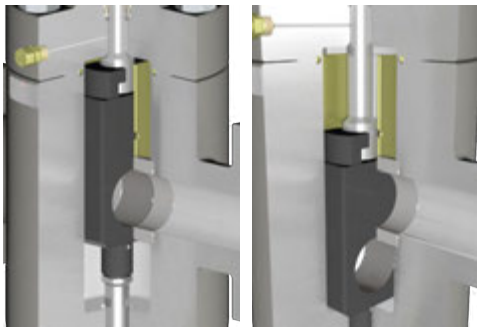

5. The gate must be fully open (left) or closed (right).

FIELD HOOK-UP INSTRUCTIONS



1. Grease and insert ring joint into the valve flange.



2. Align the service flange holes with the body flange holes. Push a stud through each aligned hole until there is a stud through each hole.

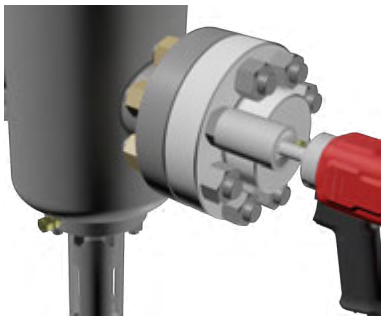

3. Screw a hex nut on both sides of each stud by hand.

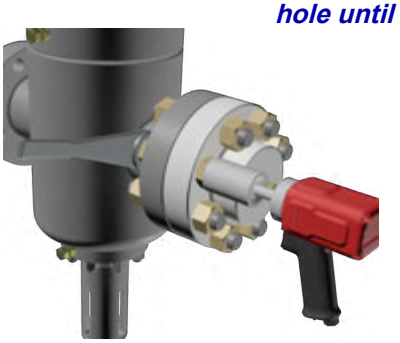

4. Torque the service flange hex nuts with a certified torque gun until they are tight.



5. Be sure the Alemite fittings are on and tight.

PROPRIETARY BOOKLET OF VALVEWORKS USA. DO NOT REPRODUCE WITHOUT EXPLICIT PERMISSION.

VALVEWORKS USA
WHEN PRESSURE DEMANDS QUALITY™

DIMENSION TABLE KEY

A	FLANGE TO FLANGE
B	VALVE BORE SIZE
C	BORE CENTERLINE TO BOTTOM
D	BORE CENTERLINE TO TOP
E	HANDWHEEL DIAMETER
NT	NUMBER OF TURNS
WT	APPROXIMATE WEIGHT

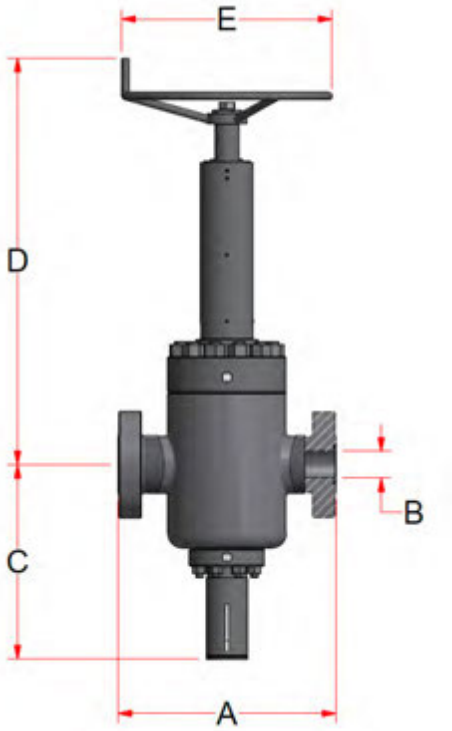

FLANGED GATE VALVES

SIZE	WP (PSI)	A	B	C	D	E	NT	WT
4 1/16	15K	29	4 1/16	25 3/4	54 1/4	28	9 5/8	2050

PROPRIETARY BOOKLET OF VALVEWORKS USA. DO NOT REPRODUCE WITHOUT EXPLICIT PERMISSION.



1650 SWAN LAKE ROAD
BOSSIER CITY, LA USA 71111

PHONE	318-425-0266
FAX	318-425-0934
TOLL FREE	888-425-0266
EMAIL	SALES@VWUSA.US
WEBSITE	WWW.VALVEWORKSUSA.COM

PROPRIETARY BOOKLET OF VALVEWORKS USA. DO NOT REPRODUCE WITHOUT EXPLICIT PERMISSION.