VALVEWORKS USA

WHEN PRESSURE DEMANDS QUALITY®

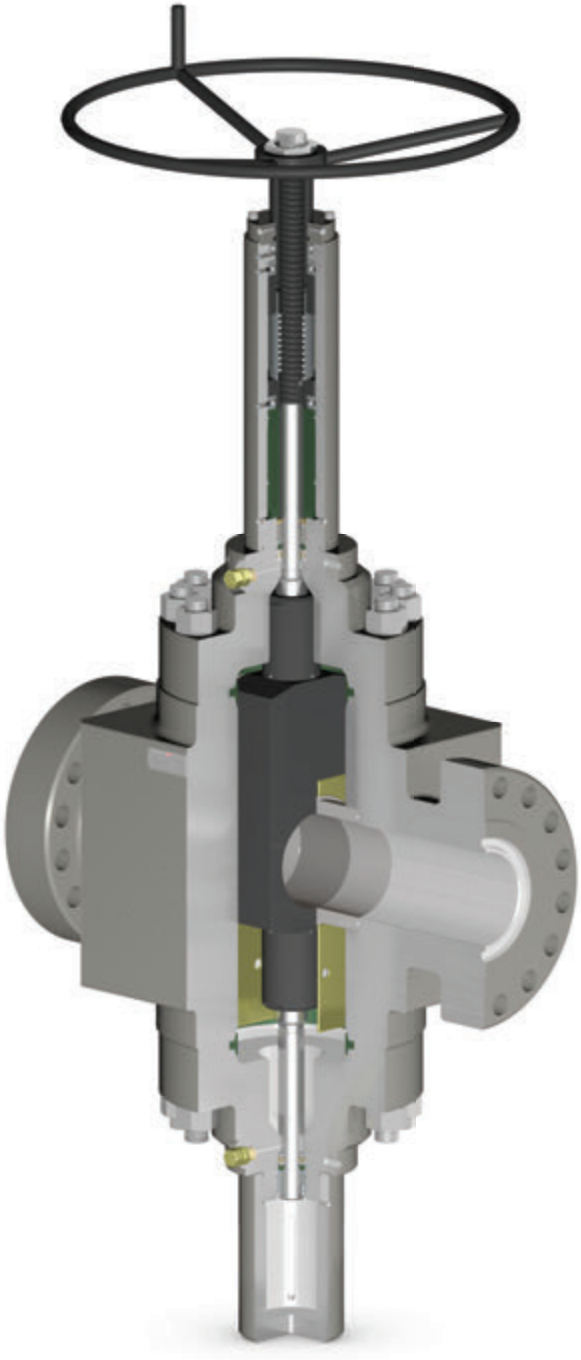

# MODEL FM1 GATE VALVE
# SERVICE AND OPERATION MANUAL

PROPRIETARY BOOKLET OF VALVEWORKS USA. DO NOT REPRODUCE WITHOUT EXPLICIT PERMISSION.

SALES@VWUSA.US WWW.VALVEWORKSUSA.COM

VALVEWORKS USA
WHEN PRESSURE DEMANDS QUALITY®

## INTRODUCTION

In appreciation to our customer for purchasing our product, we have prepared this Operation Manual to assist you in the Operation, Maintenance, Assembly and Installation of the Valveworks USA API 6A Model FM1 Gate Valve. We encourage following the recommendations in this booklet to attain the best possible service from our product, which is designed and proven to offer the service one can expect of a quality product.
To contact a representative for more specific information pertaining to a special problem:

VALVEWORKS USA
WHEN PRESSURE DEMANDS QUALITY®

1650 SWAN LAKE ROAD
BOSSIER CITY, LA USA 71111

| | |
|---|---|
| PHONE | 318-425-0266 |
| FAX | 318-425-0934 |
| TOLL FREE | 888-425-0266 |
| EMAIL | CUSTOMERSERVICE@VWUSA.US |
| WEBSITE | WWW.VALVEWORKSUSA.COM |


## QUALITY

Valveworks USA management and employees are committed to continually improve the effectiveness of our quality management system to produce a quality assured product which meets or exceeds our customer's expectations and requirements.

## SAFETY

Caution must be taken as to the surrounding area and its potential dangers of projectiles.
Pressure kills! Even a loose, stand alone valve may contain trapped pressure which will turn any component into a projectile missile when disassembled, causing injury or death. Never stand over a component or in its path of release during assembly. Always operate the valves from the open to close position slowly releasing trapped pressure. Always remove fittings first, taking extreme caution to their potential danger as a projectile. If the valve is frozen and can not be operated, take extreme caution to the disassembly of the components. Caution should be taken when handling components during disassembly and assembly, as most components are heavy, greasy, hard to handle and have edges which can cause injury. Always be cautious of how the valve is positioned and standing. Be sure the valve is secured in position so there is no possible chance of tipping over. Never apply test pressure above the manufacturers rated working pressure. The shell test pressure above the working pressure has already been tested by the manufacturer and is not required after the initial assembly test of the valve. The manufacturer has already verified the quality of the valve shell body components and will void the warranty from the manufacturer if the valve is pressure tested above the rated working pressure indicated for the valve. Always wear steel toes shoes, hard hat, eye and ear protection while performing repairs.

PROPRIETARY BOOKLET OF VALVEWORKS USA. DO NOT REPRODUCE WITHOUT EXPLICIT PERMISSION.

VALVEWORKS USA
WHEN PRESSURE DEMANDS QUALITY®

# TABLE OF CONTENTS


| | |
|---|---|
| APPLICATIONS | 4 |
| TEMPERATURE RATING | 4 |
| TRIM CHART | 4 |
| ORDERING INFORMATION | 5 |
| OPERATION | 5 |
| ASSEMBLY DRAWING | 6-7 |
| BOM | 8-9 |
| DISASSEMBLING THE VALVE | 10-12 |
| BACKSEATING PROCEDURE | 13-14 |
| PERIODIC MAINTENANCE | 14-17 |
| TROUBLESHOOTING | 18 |
| MAINTENANCE INTERVALS | 18 |
| TEST PROCEDURE | 19 |
| HYDROSTATIC SEAT TEST | 20 |
| STUDDED OUTLET INSTALLATION/TESTING | 21 |
| VISUAL INSPECTION | 22 |
| FIELD HOOK UP INSTRUCTIONS | 22 |
| LIMITED PRODUCT WARRANTY | 23-24 |
| TECHNICAL DATA | 25 |


PROPRIETARY BOOKLET OF VALVEWORKS USA. DO NOT REPRODUCE WITHOUT EXPLICIT PERMISSION.

VALVEWORKS USA
WHEN PRESSURE DEMANDS QUALITY®

## APPLICATIONS

Valveworks USA FM1 gate valve unit can be applied to the following sizes and working pressures.

| APPLICATION | OPTIONS AVAILABLE |
|---|---|
| GATE VALVE SIZE | 5-1/8" , 7-1/16" |
| MAXIMUM ALLOWABLE WORKING PRESSURE (MAWP) | 10M, 15M, 20M |
| TEMPERATURE RANGE | -60°C TO 121°C (-75°F TO 250°F) |

The flanged outlet gate valve is rated for 10,000 psi and 15,000 psi working pressure and the studded outlet gate valve of this product line is rated for 10,000 psi, 15,000 psi, and 20,000 psi.

## TEMPERATURE RATING

| TEMPERATURE CLASSIFICATION | OPERATING RANGE | | | |
|---|---|---|---|---|
| | °C | | (°F) | |
| K | -60 | 82 | -75 | 180 |
| L | -46 | 82 | -50 | 180 |
| N | -46 | 60 | -50 | 140 |
| P | -29 | 82 | -20 | 180 |
| S | -18 | 60 | 0 | 140 |
| T | -18 | 82 | 0 | 180 |
| U | -18 | 121 | 0 | 250 |
| V | 2 | 121 | 35 | 250 |

## TRIM CHART

| MATERIAL CLASS | MINIMUM MATERIAL REQUIREMENTS | |
|---|---|---|
| | BODY, BONNET, END AND OUTLET CONNECTIONS | PRESSURE-CONTROLLING PARTS, STEMS, AND MANDREL HANGERS |
| AA - General Service | Carbon or low-alloy steel | Carbon or low-alloy steel |
| BB - General Service | Carbon or low-alloy steel | Stainless steel |
| CC - General Service | Stainless steel | Stainless steel |
| DD - Sour Service [a] | Carbon or low-alloy steel [b] | Carbon or low-alloy steel [b] |
| EE - Sour Service [a] | Carbon or low-alloy steel [b] | Stainless steel [b] |
| FF - Sour Service [a] | Stainless steel [b] | Stainless steel [b] |
| HH - Sour Service [a] | CRAs [b] | CRAs [b] |

[a] As defined by NACE MR0175.
[b] In compliance with NACE MR0175.

*As shown by API-6A. For specific details consult Valveworks USA.*

PROPRIETARY BOOKLET OF VALVEWORKS USA. DO NOT REPRODUCE WITHOUT EXPLICIT PERMISSION.

VALVEWORKS USA
WHEN PRESSURE DEMANDS QUALITY®

## ORDERING INFORMATION

**The following information should be provided with any request for quote or order placement of Valveworks USA FM1 Gate Valves:**

- **API 6A Requirements (PR-PSL)**
- **Temperature Rating (API 6A)**
- **Material (API 6A)**
- **Any Special Test Requirements**
- **Any Special Material Requirements**
- **Any Special Coating or Protection Requirements**
- **Other Specifications and/or Certifications**

## OPERATION

**The Valveworks USA Model FM1 gate valves are Ball Screw operated valves. The gate of the MODEL FM1 Valve is a one piece slab gate that uses two floating seats to generate a highly reliable seal. The slab gate eliminates the chance of trapping pressure within the body cavity which can cause pressure locking.**

- **Fully open the valve before installing or shipping. The sealing area of the gates, in the full open position, is protected by the body and is less likely to be damaged.**
- **To hydrostatically test the valve body to working pressure, the valve *must be* in a partially open position. When testing the valve in the closed position (seat test) *do not* exceed the working pressure stamped on the valve identification plate.**
- **During storage always leave the valve in the *fully opened* position. This will prevent damage to the sealing area of both the gate and seats.**
- **Always remove the valve from service before work is performed on the stem bearings.**
- **When lubricating the body do not exceed the maximum API working pressure stamped on the identification plate.**
- **The valve should be fully closed or fully opened during lubrication of the body cavity. Lubrication pressures should not exceed the maximum allowable API test pressure.**

**This method of operation will prevent damage to the sealing surfaces of the gate and seats, and will increase the life of the valve.**

PROPRIETARY BOOKLET OF VALVEWORKS USA. DO NOT REPRODUCE WITHOUT EXPLICIT PERMISSION.

VALVEWORKS USA
WHEN PRESSURE DEMANDS QUALITY®

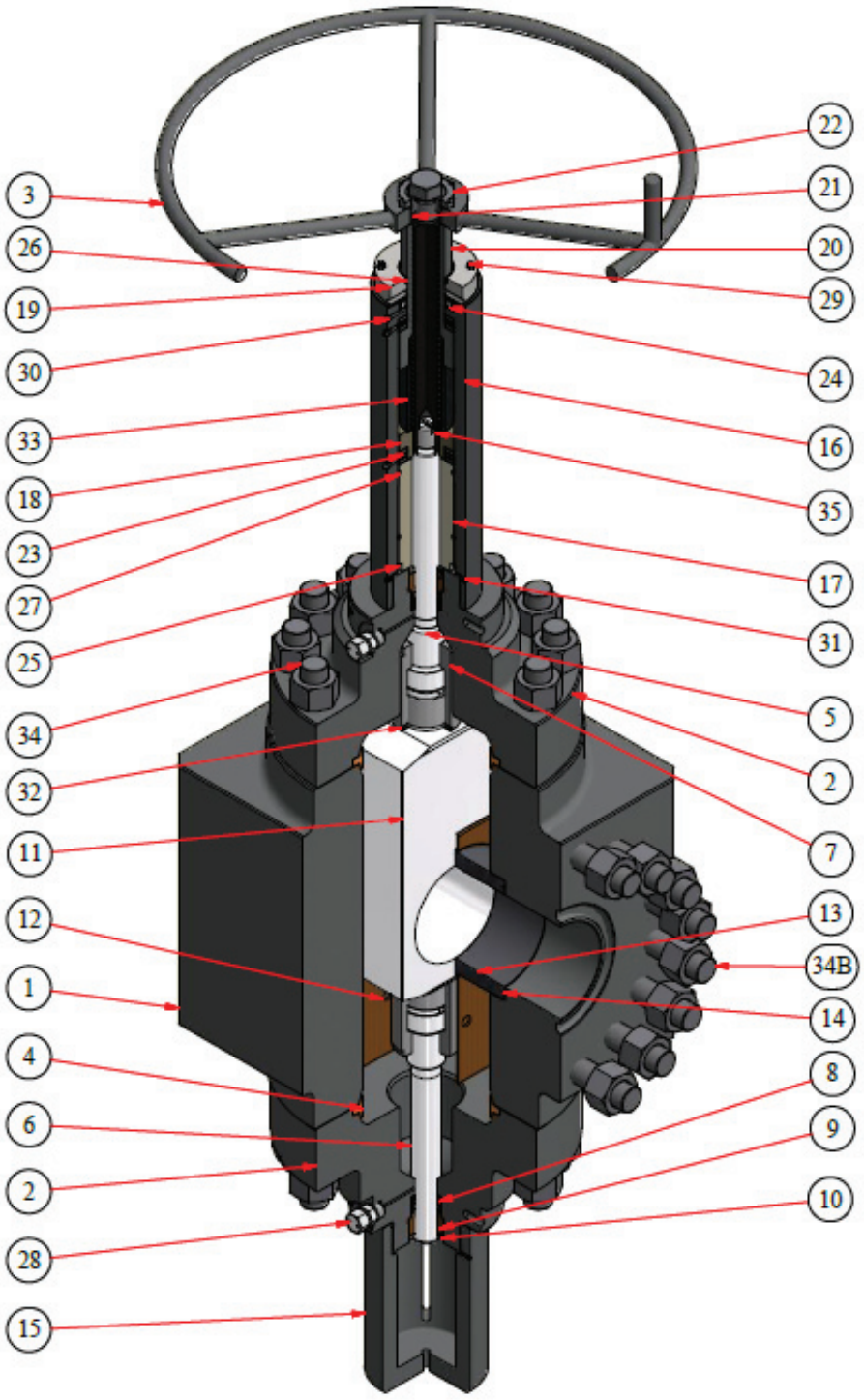


## MODEL FM1 - STUDDED X STUDDED BODY

*(HANDWHEEL OPERATED)*
*OPERATION: BI-DIRECTIONAL - SLAB GATE*
*TO OPEN AND CLOSE:*
*BACKOFF HANDWHEEL 1/4 TURN*
*(GATE SHOWN IN OPEN POSITION)*

PROPRIETARY BOOKLET OF VALVEWORKS USA. DO NOT REPRODUCE WITHOUT EXPLICIT PERMISSION.

VALVEWORKS USA
WHEN PRESSURE DEMANDS QUALITY®

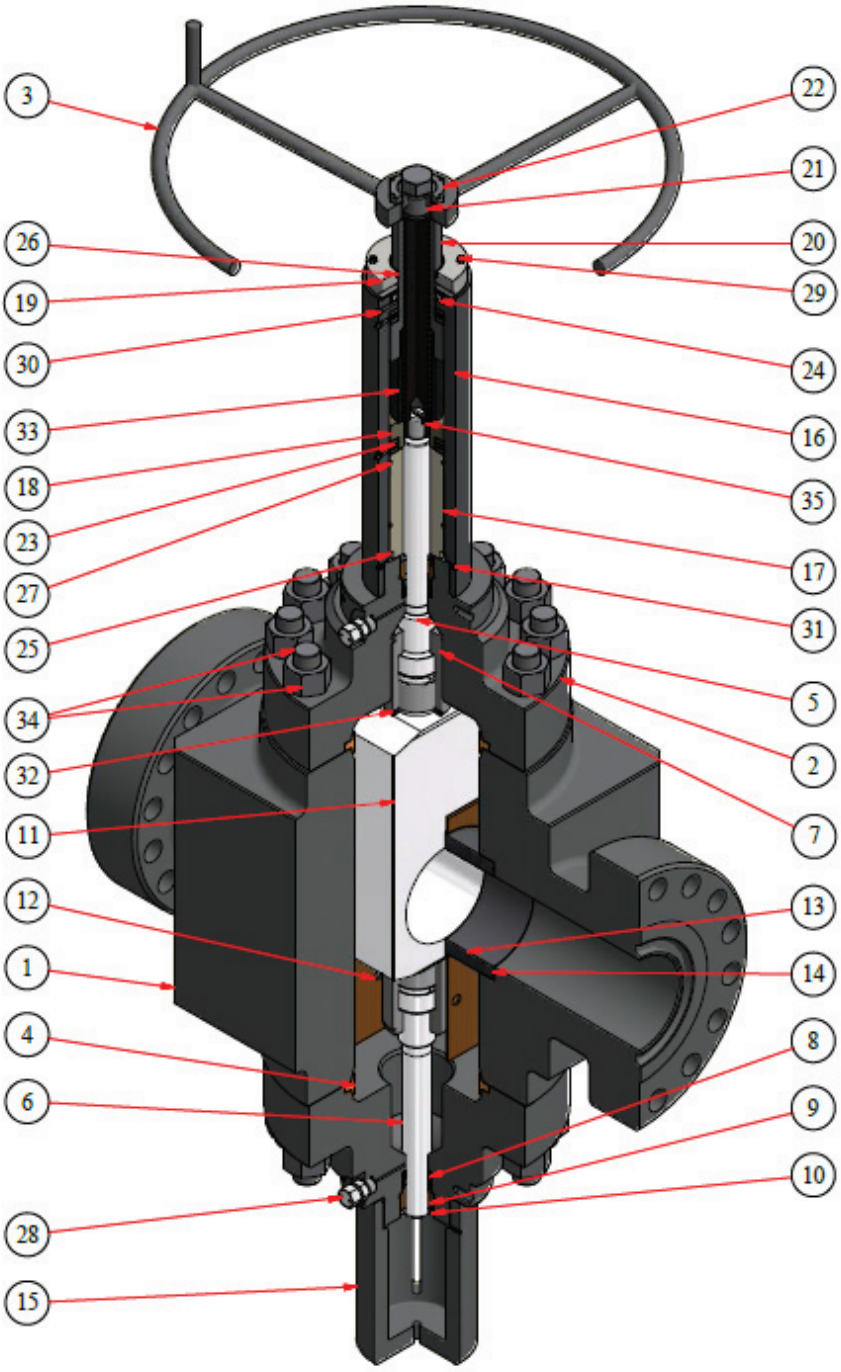


## MODEL FM1 - FLANGED X FLANGED BODY

*(HANDWHEEL OPERATED)*
*OPERATION: BI-DIRECTIONAL - SLAB GATE*
*TO OPEN AND CLOSE:*
*BACKOFF HANDWHEEL 1/4 TURN*
*(GATE SHOWN IN OPEN POSITION)*

PROPRIETARY BOOKLET OF VALVEWORKS USA. DO NOT REPRODUCE WITHOUT EXPLICIT PERMISSION.

VALVEWORKS USA
WHEN PRESSURE DEMANDS QUALITY®

| ASSEMBLY PARTS LIST | | |
|---|---|---|
| ITEM | DESCRIPTION | QTY |
| 1 | BODY | 1 |
| 2 | BONNET | 2 |
| 3 | HANDWHEEL | 1 |
| 4 | BONNET SEAL RING | 2 |
| 5 | STEM, OPERATING | 1 |
| 6 | STEM, BALANCE | 1 |
| 7 | GATE NUT | 2 |
| 8 | PACKING | 2 |
| 9 | PACKING RETAINER NUT | 2 |
| 10 | PACKING RETAINER LOCKNUT | 2 |
| 11 | GATE, SLAB | 1 |
| 12 | GATE GUIDE | 2 |
| 13 | SEAT | 2 |
| 14 | SEAT SEAL | 2 |
| 15 | STEM PROTECTOR | 1 |
| 16 | HOUSING, BALLSCREW | 1 |
| 17 | BEARING SPACER, LOWER | 1 |
| 18 | BEARING SPACER, UPPER | 1 |
| 19 | COVER PLATE | 1 |
| 20 | STEM, ADAPTER | 1 |
| 21 | GLAND, BACKSEAT | 1 |
| 22 | HANDWHEEL NUT | 1 |
| 23 | BEARING, INTERNAL | 2 |
| 24 | BEARING, EXTERNAL | 1 |
| 25 | SNAP RING, SPIROLOX | 1 |
| 26 | ROD WIPER | 1 |
| 27 | O-RING | 2 |
| 28 | AUTOCLAVE FITTING | 2 |
| 29 | CAP SCREW | 4 |
| 30 | ALEMITE FITTING | 3 |
| 31 | SET SCREW | 4 |
| 32 | SET SCREW | 5 |
| 33 | BALLSCREW, LH THREAD | 1 |
| 34 | STUD W/ NUT (BODY TO BONNET) 7 1/16" 10K & 15K | 24 |
| 34A | STUD W/ NUT 7 1/16" 10K STUDDED OUTLET | 24 |
| 34B | STUD W/ NUT 7 1/16" 15K STUDDED OUTLET | 32 |
| 35 | ROLL PIN | 1 |

PROPRIETARY BOOKLET OF VALVEWORKS USA. DO NOT REPRODUCE WITHOUT EXPLICIT PERMISSION.

VALVEWORKS USA
WHEN PRESSURE DEMANDS QUALITY®

| PART NUMBER BREAKDOWN: 29 A - FM1 - B C X Y | | | | | |
|---|---|---|---|---|---|
| "A" | BODY TYPE | "B" | MAWP | "C" | BORE SIZE |
| 0 | FLANGED | 7 | 10,000 PSI | 5 | 5-1/8" |
| 8 | STUDDED | 8 | 15,000 PSI | 7 | 7-1/16" |
| 9 | FLANGED X STUDDED | 9 | 20,000 PSI | | |

**The last two digits in the part no's vary with "X" Material Type and "Y" Coating. The table below gives the different available material types and coatings. Please refer to the valve tag to know the material type and coating on the valve parts.**

| "X" | MATERIAL TYPE | "Y" | COATING |
|---|---|---|---|
| 1 | 4130 | 0 | NONE; PHOSPHATE, MOLY, STANDARD PAINT/COATING, POWDER COAT |
| 1A | 4140 | | |
| 1B | 1040 | | |
| 1C | 1018 | | |
| 1D | 1020 | | |
| 1E | SA285-C | 1 | NITRIDE QPQ-PHOSPHATE; EXCEPTION - FC BODY BUSHING |
| 1F | 1026 | | |
| 2 | 410SS FORGED | | |
| 2A | S42400 | | |
| 3 | 174SS | | |
| 3A | NITRONIC 50 | 2 | HARDFACE-STELLITE #6 SPRAY & FUSE |
| 4 | 316SS | | |
| 4A | 316/304SS | | |
| 4B | 304SS | 3 | HARDFACE - TUNGSTEN CARBIDE |
| 5 | BRONZE | | |
| 6 | INCONEL 718 | | |
| 6A | INCONEL 725 | 4 | HARDFACE - COLMONOY #5 |
| 6B | INCONEL X750 | | |
| 7 | MONEL | 5 | ELECTROLIS NICKEL |
| 8 | A487-4D | | |
| 8A | A487-4C | 6 | WELD ON HARDFACE |
| 8B | CA15 | | |
| 8C | CF8M | 7 | ZINC PLATE |
| 8D | CF3M | 8 | XYLAN COATING |
| 8E | CA6NM | 9 | (4130) INCONEL 625 CLAD |
| 9 | STELLITE #6 | | |
| 9A | PLASTIC | 9A | (4130)SS-316-RING GROOVE |
| 9B | STELLITE #3 | | |

PROPRIETARY BOOKLET OF VALVEWORKS USA. DO NOT REPRODUCE WITHOUT EXPLICIT PERMISSION.

VALVEWORKS USA
WHEN PRESSURE DEMANDS QUALITY®

## DISASSEMBLING THE VALVE



1. (Horizontal Orientation) Unscrew and remove the Handwheel Nut with a crescent wrench.



2. Remove the Handwheel.

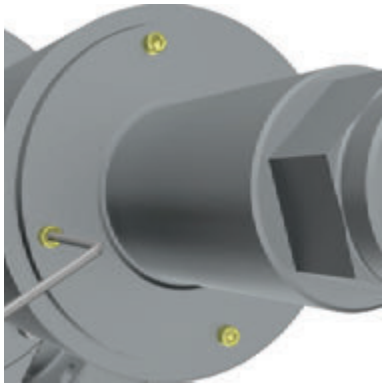

3. Unscrew and remove Cover Plate Screws with an allen wrench.

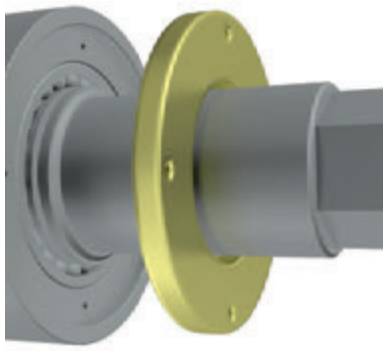

4. Remove the Cover Plate.
Note: Use a wire brush to clean paint off the stem adapter.

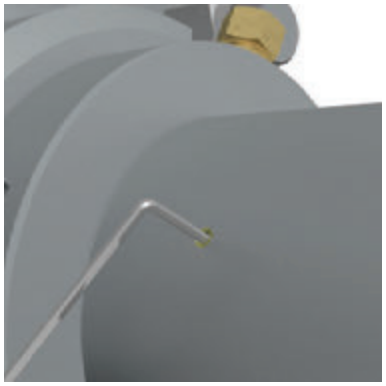

5. Unscrew and remove Set Screws on the Ball Screw Housing.



6. Replace the Handwheel.

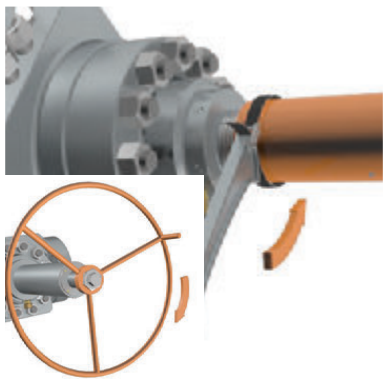

7. Rotate handwheel clockwise while unscrewing the Ball Screw Housing (counter-clockwise).

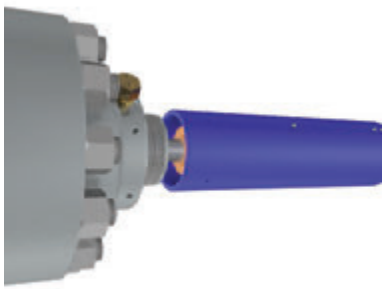

8. Rotate the handwheel counter-clockwise to back up the Ball Screw Housing enough to access the Spirolox Retainer Ring.



9. Remove the Handwheel.

PROPRIETARY BOOKLET OF VALVEWORKS USA. DO NOT REPRODUCE WITHOUT EXPLICIT PERMISSION.

VALVEWORKS USA
WHEN PRESSURE DEMANDS QUALITY®

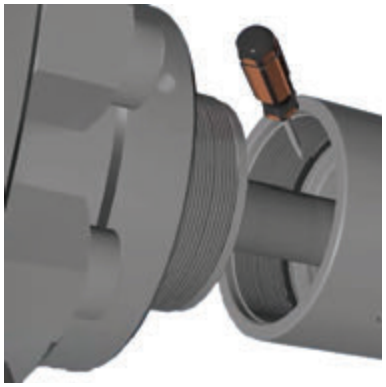

*10. Remove the Retainer Ring with a screwdriver.*



*11. Remove the Ball Screw Housing.*

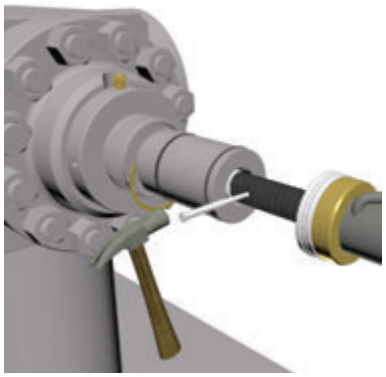

*12. Remove the Roll Pin to disengage the Ball Screw.*



*13. Remove the Ball Screw Assembly.*



*14. Remove the Bearing Sleeve and Retainer Ring.*



*15. (Vertical Orientation) Unscrew and remove the Packing Retainer Locknut and Packing Retainer with an expanding wrench.*

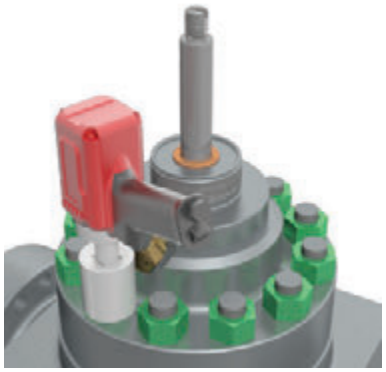

*16. Unscrew and remove the Bonnet Nuts using a torque wrench.*



*17. Remove the Upper Bonnet.*

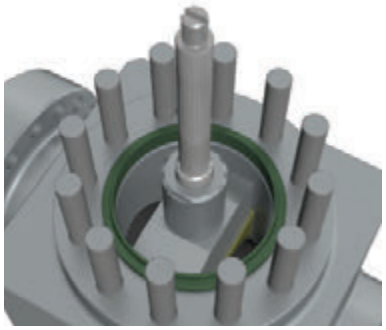

*18. This gives access to the Bonnet Seal Ring, Gate, and Seats.*

PROPRIETARY BOOKLET OF VALVEWORKS USA. DO NOT REPRODUCE WITHOUT EXPLICIT PERMISSION.

VALVEWORKS USA
WHEN PRESSURE DEMANDS QUALITY®



*19. Remove the Gate and Stem Assembly.*

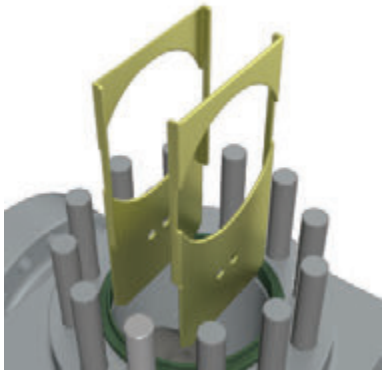

*20. Remove the Gate Guides.*

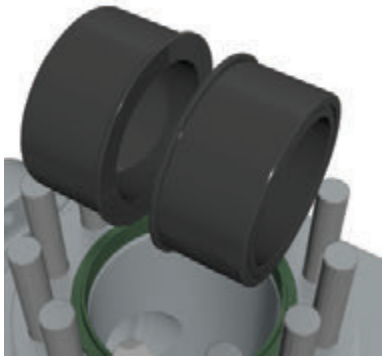

*21. Remove the Seats.*

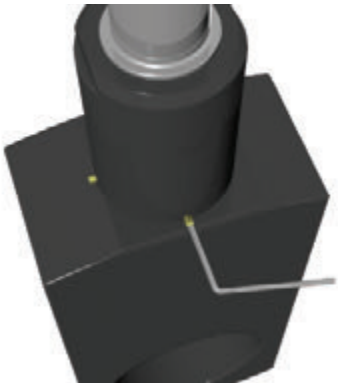

*22. Remove Gate Nut Set Screws using an allen wrench.*



*23. Unscrew and remove the Gate Nut and Operating Stem.*



*24. Repeat steps 22 and 23 for the Balancing Stem.*

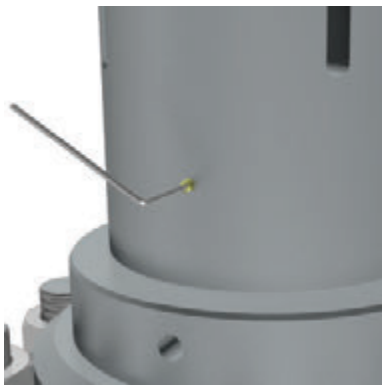

*25. Unscrew and remove Set Screw located on the Stem Protector with an allen wrench.*



*26. Unscrew and remove the Stem Protector.*



*26. If required, the Lower Bonnet may be removed. Follow the same steps used to remove the Upper Bonnet.*

PROPRIETARY BOOKLET OF VALVEWORKS USA. DO NOT REPRODUCE WITHOUT EXPLICIT PERMISSION.

VALVEWORKS USA
WHEN PRESSURE DEMANDS QUALITY®

## BACKSEATING PROCEDURE - OPERATING STEM



1. Remove the Backseat Gland.



2. Remove the Lower Stem Protector.



3. Operate the valve to the fully open position and hold. The balance stem should be mostly into the lower bonnet.

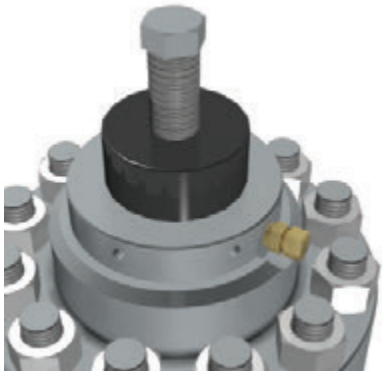

4. Install the backseat engagement tool and thread on the cap until it bottoms out. Do not over tighten the cap.



5. Have a second operator turn the hand wheel forcing the backseat to engage and hold. Do not apply excessive force to the hand wheel. No “cheater pipes” are needed.

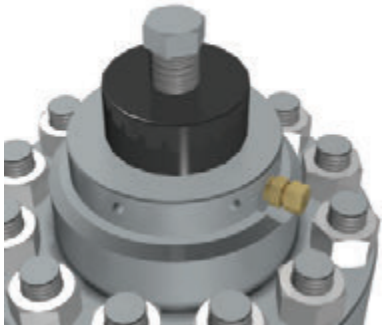

6. While the second operator holds the backseat engaged, thread the supplied bolt into the cap.



7. Using a wrench to tighten the bolt down to lock the stem/backseat into position. Do not over tighten the bolt. (Approximately 50 ft*lbf)

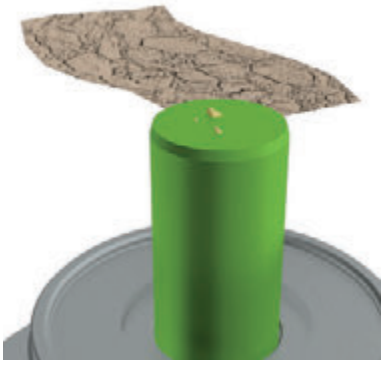

Note: Use fine sand paper to remove any burrs left on the balance stem. Additionally, injecting grease into the grease port helps pushing the packing out of the bonnet.

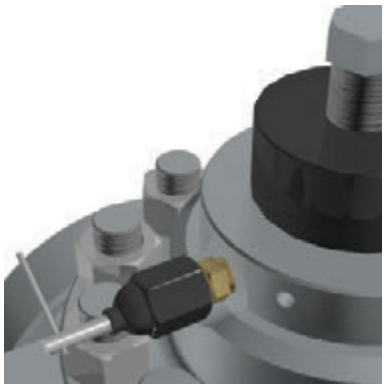

9. Use a bleeder style fitting to relieve pressure below the packing. Be cautious of well gases! (ie:$H_2S$) It is up to the operator to know what is in their wells.

PROPRIETARY BOOKLET OF VALVEWORKS USA. DO NOT REPRODUCE WITHOUT EXPLICIT PERMISSION.

VALVEWORKS USA
WHEN PRESSURE DEMANDS QUALITY®

## BACKSEATING PROCEDURE - BALANCE STEM



*1. Remove the Backseat Gland.*



*2. Carefully insert the FM Series Backseat Tool about 1 inch. Be sure the supplied nut is threaded under the hand wheel as shown.*



*3. Move the valve to the closed position and ensure the backseat is tightly held engaged. (Bottom View Shown)*



*4. While one operator holds the backseat engaged, have another operator thread in the backseat tool and tighten the backseat tool hand wheel. Do not over tighten the tool.*



*5. While holding both hand wheels tight, tighten the lock nut down to hold everything engaged.*

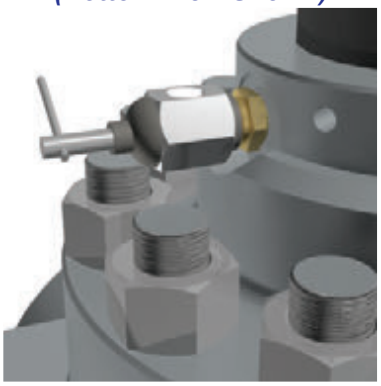

*6. The backseat is now engaged. Use a bleeder style fitting to relieve the pressure.*
*Note: All warnings of the operating stem backseating procedure apply here as well.*

## PERIODIC MAINTENANCE

**The Model FM1 gate valves are non-lubricated valves and do not require the injection of lubricants or sealants to effectively seal. However, to prevent corrosion and excessive wear a normal amount of lubrication is recommended to extend the life and serviceability of the valve. Valveworks USA API Gate Valves at 15,000 PSI W.P. are supplied with 9/16” 17-4SS autoclave fitting connections.**

PROPRIETARY BOOKLET OF VALVEWORKS USA. DO NOT REPRODUCE WITHOUT EXPLICIT PERMISSION.

VALVEWORKS USA
WHEN PRESSURE DEMANDS QUALITY®

## MAINTENANCE TOOLS

**To perform normal maintenance and lubrication, the following tools are recommended:**



*Grease pump with adapter and coupling*



*Safety pressure releasing tool*

## VALVE BODY LUBRICATION

**Valve body lubrication reduces operating friction and prevents the accumulation of water, lime scale, sediment, and other foriegn matter. It is recommended that the valve is greased on a regular basis and the body cavity be at least 3/4 full of grease.**

**Recommended Lubricant: Valveworks USA OEM Grease Part # 400-0002**

## PROCEDURE

**CAUTION:** Do not fully open the valve as this will keep the lubricant from entering the body cavity.

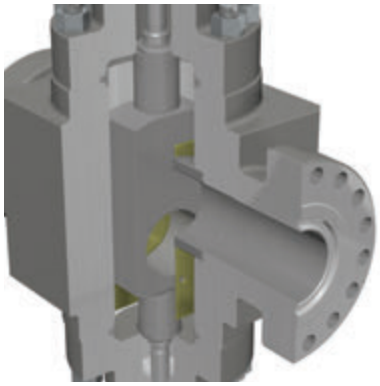

*1. Partially open the valve.*

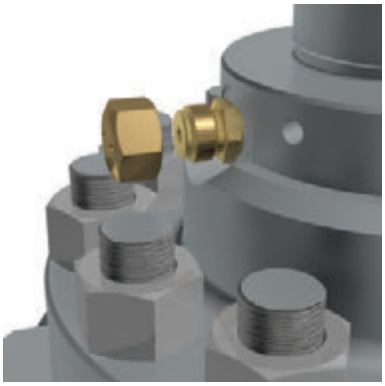

*2. Remove the safety cap from the bonnet grease fitting.*



*3. Install the grease hose fitting (with gauge) to the bonnet grease fitting.*

**4. Inject lubricant into the body as required.**

**CAUTION: During pressurized valve body lubrication, pressure applied to the valve body with the grease gun must not exceed maximum working pressure of the valve being lubricated.**

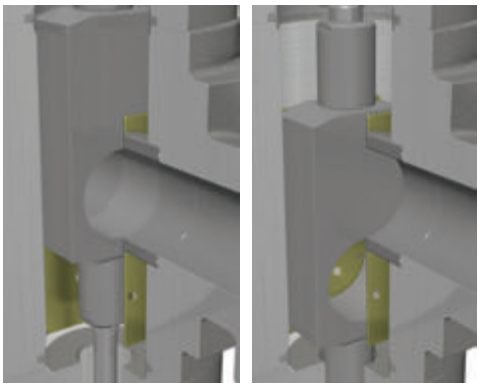

*5. If there is no flow through the valve, open and close the valve two times. This distributes the lubricant through the valve and breaks up any solids.*



*2. Remove the grease hose fitting.*

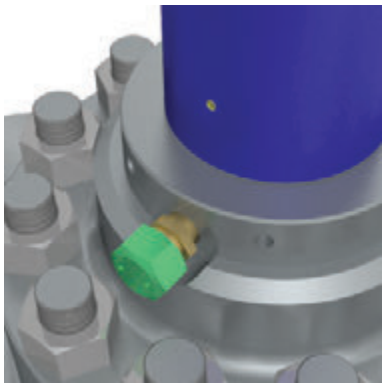

*3. Replace the safety cap on the bonnet grease fitting.*

PROPRIETARY BOOKLET OF VALVEWORKS USA. DO NOT REPRODUCE WITHOUT EXPLICIT PERMISSION.

VALVEWORKS USA
WHEN PRESSURE DEMANDS QUALITY®

**CAUTION:** All valve lubrication procedures referenced in this manual are performed in a shop environment only with valve(s) containing no well-bore pressure. Always refer to your company's internal operating and safety procedures when lubricating valves under pressure or in field applications.

## BALL SCREW BEARING LUBRICATION

Valveworks USA FM1 valves are equipped with alemite hydraulic type 1/8" NPT bonnet grease fittings. Ball Screw bearing lubrication is accomplished through this fitting using a standard type grease gun. Any good grade No. 3 grease is recommended for this lubrication. Ball screw bearings normally do not require great amounts of grease. If too much lubrication should occur, excess grease will flow around the stem to the atmosphere.

**CAUTION:**
If bearings should need to be changed, the valve must be removed from service.

## VENTING OR DRAINING A VALVE

Most products contain a certain amount of water, lime scale, sediment and other foreign matter which tend to accumulate in the valve body. A routine maintenance program will increase the life of a valve against damage caused by:

- Water freezing in the body cavity, causing damage to the body.
- An accumulation of foreign matter in the lower part of the body that could prevent the valve from fully closing; resulting in a throttling action that may cause inefficient sealing.
- Foreign matter trapped in the body may become lodged between the sealing surfaces of the gate and seats, resulting in scored or damaged gate/seat sealing surfaces.

## PROCEDURE TO VENT OR DRAIN

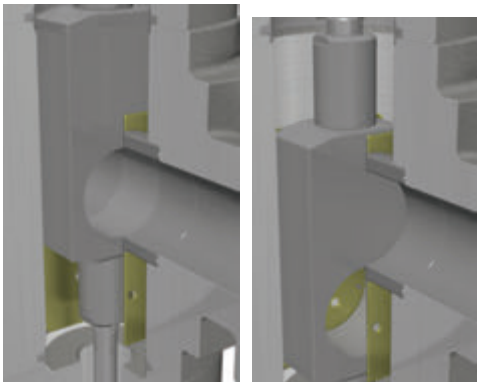

*1. The gate must be fully open (left) or closed (right).*

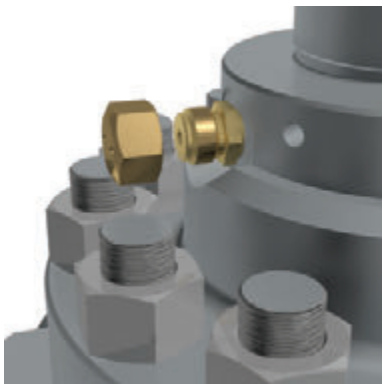

*2. Remove the safety cap from either body grease fitting.*

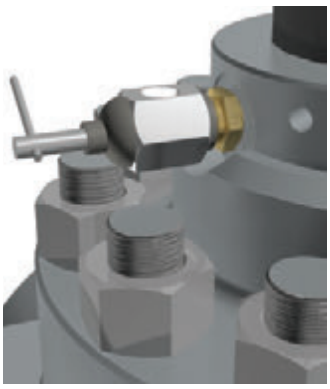

*3. Attach the pressure release tool.*

**CAUTION:**
Remove the safety cap slowly to allow the ball check to sufficiently seal and avoid uncontrolled venting. Should the ball check fail to seal properly, pressure will continue to blow through the safety cap orifices. You should then retighten the safety cap screw and vent through the other body grease fitting. Once the body pressure is bled to zero you should then attempt to repair the leaking ball check.

PROPRIETARY BOOKLET OF VALVEWORKS USA. DO NOT REPRODUCE WITHOUT EXPLICIT PERMISSION.

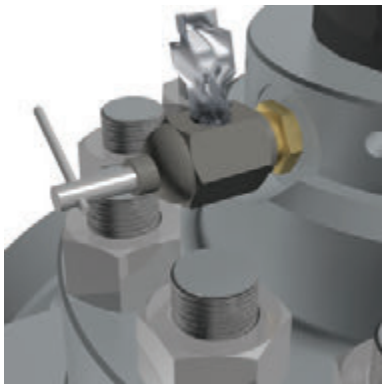

*4. Screw the stem of the releasing tool into the fitting forcing the ball check off its seat. The valve will vent and drain once the ball check is unseated.*

**A program of regular draining and body venting is the most positive way to prevent problems caused by foreign matter in the valve. However, if a regular draining program cannot be followed, it is recommended that valves be drained after the following operations:**

- **After a well has come in and has been cleaned.**
- **After a mudding operation.**
- **After a cementing operation.**
- **Anytime the valve seems hard to operate by hand and will not fully open or close by the required number of hand wheel turns.**
- **When the valve is hard to operate from the fully open or fully closed position because it is "pressure locked" or "Iced-up".**

***"ICED-UP"*** **is a condition caused by a restriction in the flow or a differential in the pressure of gas flow at high pressure, which produces extremely low temperatures.**

**These restrictions or differentials in pressure may be caused by throttling through a valve. This happens by leakage of a closed valve or leakage through the stem packing. Valves in service on gas containing hydrates or in fresh water service, which are exposed to low external temperatures can also get "iced-up". In this case it is advisable to inject alcohol or glycol into the valve body through the drain fitting to combat these conditions.**

**The same procedures are used for injecting alcohol or glycol as are used for valve body lubrication. Do not operate the valve immediately after injecting as these fluids should be retained in the body to perform the Antifreeze effect.**

PROPRIETARY BOOKLET OF VALVEWORKS USA. DO NOT REPRODUCE WITHOUT EXPLICIT PERMISSION.

VALVEWORKS USA
WHEN PRESSURE DEMANDS QUALITY®

## TROUBLESHOOTING

| PROBLEM | CAUSE | SOLUTION |
|---|---|---|
| Leakage when closed | Seats | Disconnect from service and check for the condition of the seats. |
| Leakage when open through body/bonnet connection | Bonnet Seal Ring | Disconnect from service and replace the bonnet seal ring. |
| Leakage when partially open thru top of bonnet | Packing | Disconnect from service and replace the packing. |
| Leakage at flange | Flange Seal Ring | Disconnect from service and replace the flange seal ring. |

## MAINTENANCE INTERVALS

| PROCEDURE | RECOMMENDED INTERVAL |
|---|---|
| Vent or Drain | See Page 18 |
| Cycle Open to Close | Semi-Annually |
| Disconnect and Test | Annually |

PROPRIETARY BOOKLET OF VALVEWORKS USA. DO NOT REPRODUCE WITHOUT EXPLICIT PERMISSION.

VALVEWORKS USA
WHEN PRESSURE DEMANDS QUALITY®

## TEST PROCEDURE



*1. Lightly oil and insert a BX156 ring joint into the body flange.*

*Note: Refer to the end of the manual for studded outlet to prepare for testing.*



*2. Be sure that the test flange has a tightened grease fitting, all of its studs, and a nut on each with all of the nuts on the grease fitting side.*

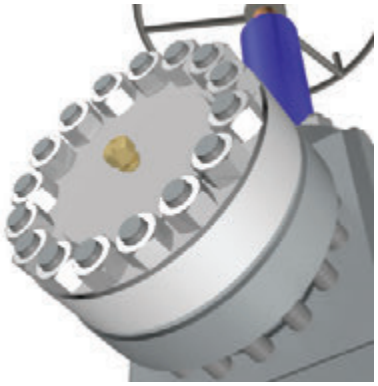

*3. Align the test flange studs with the body flange holes. Then, push the test flanges, its studs, and their hex nuts onto the body flange.*

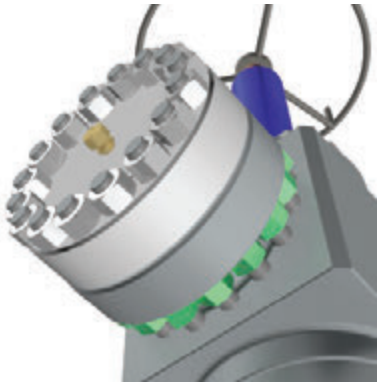

*4. Screw each hex nut on the vacant side of a stud until all of the studs have a nut on the test flange and the valve flange.*

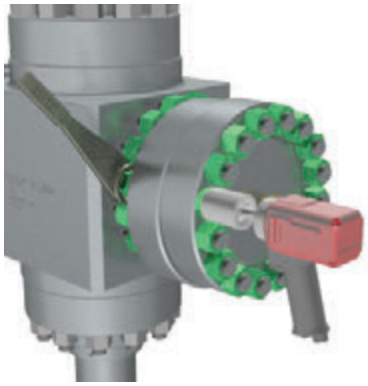

*5. Tighten the hex nuts on the test flange side with a torque wrench until they are tight.*

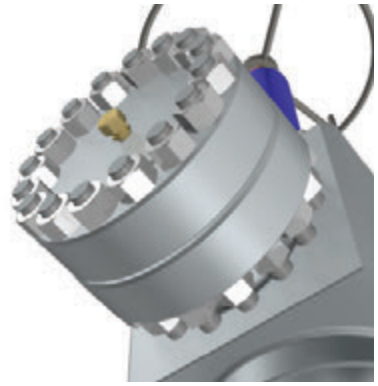

*6. A finished flange shown.*

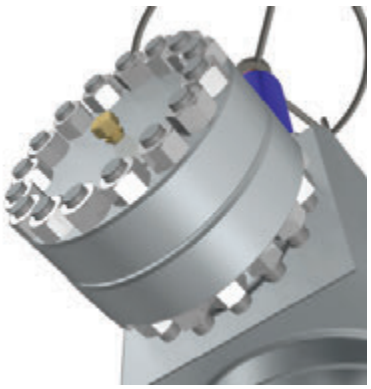

*7. Repeat steps 1-5 for the opposite flange.*



*8. Remove the grease fitting cap from one test flange and attach a pressure release tool.*



*9. Remove the grease fitting cap from the opposite test flange and attach the flow line.*

PROPRIETARY BOOKLET OF VALVEWORKS USA. DO NOT REPRODUCE WITHOUT EXPLICIT PERMISSION.

VALVEWORKS USA
WHEN PRESSURE DEMANDS QUALITY®

## HYDROSTATIC SEAT TEST

- With the valve closed, apply the rated working pressure.
- Hold and monitor at that pressure for at least (3) minutes.
- Open the valve, and bleed off the pressure until it's reduced to zero. Then, close the valve and the pressure release tool.
- Repeat the steps above.

Switch the sides of your flow and pressure release connections, bleed off the new pressure release side, and repeat steps above to perform a seat test on the new flow side.

The valve is acceptable if no leakage is visible during the holding period.

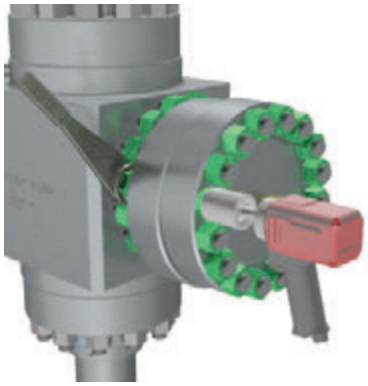

*1. While holding the hex nuts on the body flange, loosen each of the test flange hex nuts.*



*2. After removing the body flange hex nuts, you can remove the test flange, its studs, and their hex nuts.*

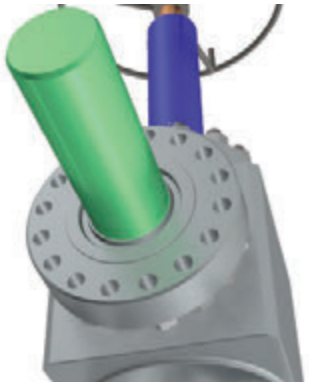

*3. Pass a drift mandrel through the valve bore after the valve has been assembled, operated, and pressure tested.*



*4. Remove the upper bonnet grease fitting cap, and attach a flow line from the grease pump to the grease fitting as shown above.*

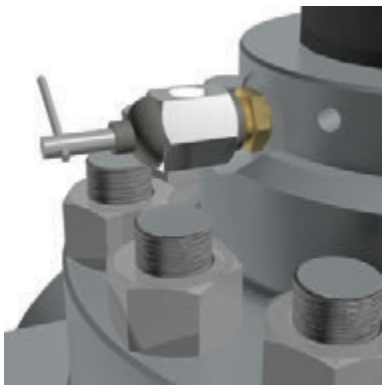

*5. Remove the lower bonnet grease fitting cap, and attach a pressure release tool as shown above.*

PROPRIETARY BOOKLET OF VALVEWORKS USA. DO NOT REPRODUCE WITHOUT EXPLICIT PERMISSION.

VALVEWORKS USA
WHEN PRESSURE DEMANDS QUALITY®

## STUDDED OUTLET INSTALLATION / TESTING

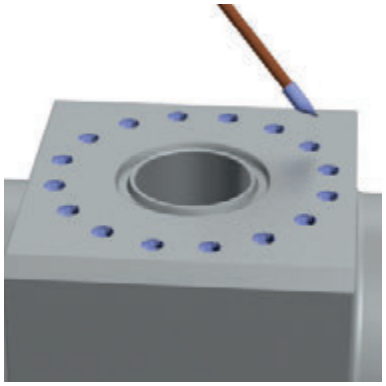

*1. Coat the threads of each hole with anti-seize compound.*



*2. Screw the 1.50 inch thread length side of each pad stud into an empty, coated hole.*

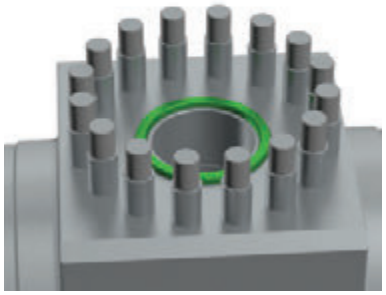

*3. Lightly oil and insert the BX156 ring joint into the valve ring groove. (too much grease will create a false seal)*

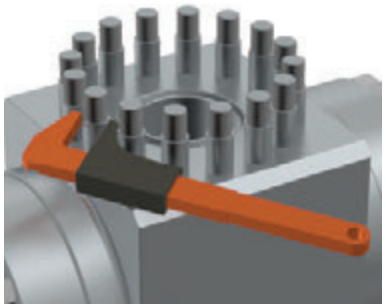

*4. Tighten each stud with a pipe wrench.*

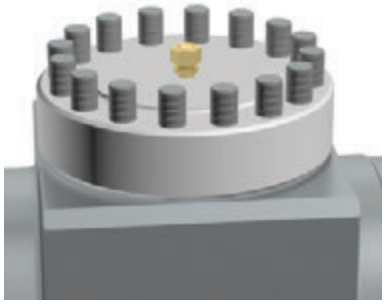

*5. Place a test flange, with a grease fitting installed, onto the studs.*

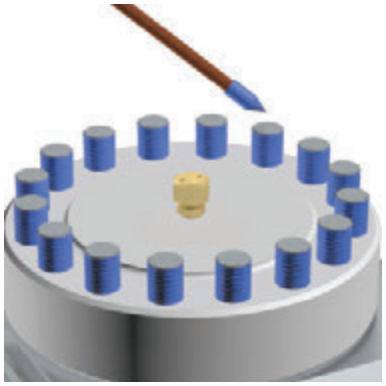

*6. Lightly coat the exposed threads of the pad stud with anti-seize compound.*

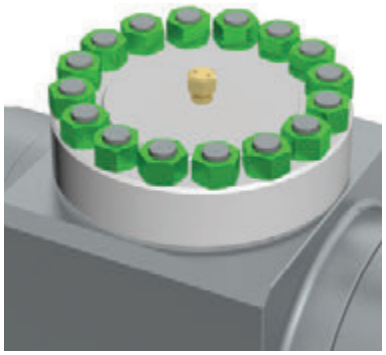

*7. Screw a hex nut onto each of the exposed pad studs.*



*8. Tighten the hex nuts with a certified torque wrench.*

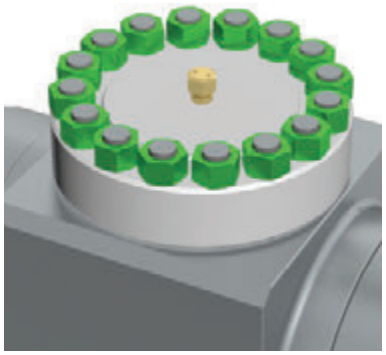

*9. Repeat the above steps to install the other test flange.*
*Note: A test flange is shown in this manual, but the service flange will use the same nuts and bolt circle.*

PROPRIETARY BOOKLET OF VALVEWORKS USA. DO NOT REPRODUCE WITHOUT EXPLICIT PERMISSION.

VALVEWORKS USA
WHEN PRESSURE DEMANDS QUALITY®

## VISUAL INSPECTION

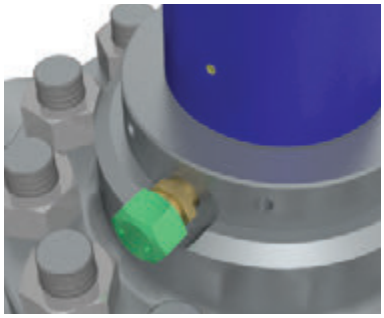

1. Be sure the upper bonnet grease fitting cap is on and tight.

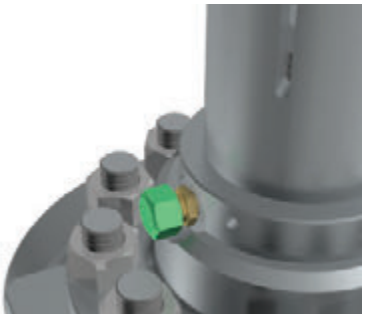

2. Be sure the lower bonnet grease fitting cap is on and tight.

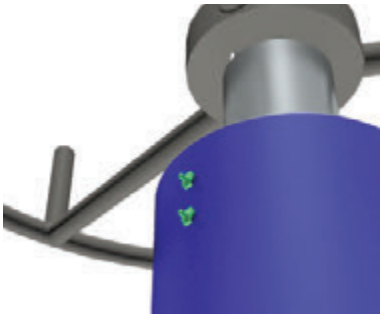

3. Be sure the Alemite fittings are on and tight.

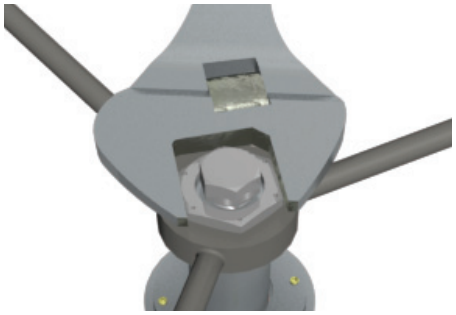

4. Be sure the Hand wheel Nut is tight.

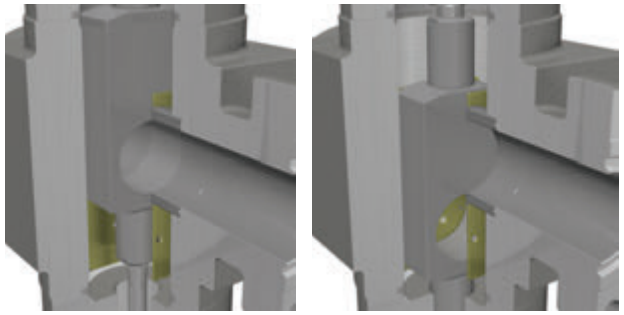

5. The gate must be fully open (left) or closed (right).

## FIELD HOOK-UP INSTRUCTIONS

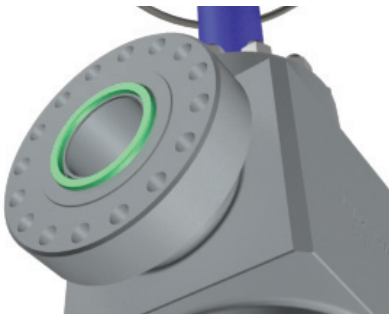

1. Grease and insert ring joint into the valve flange.

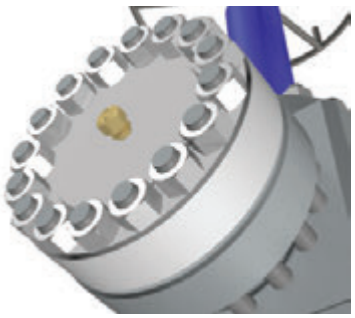

2. Align the service flange holes with the body flange holes. Push a stud through each aligned hole until there is a stud through each hole.

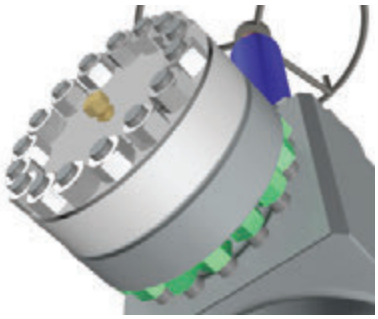

3. Screw a hex nut on both sides of each stud by hand.



4. Torque the service flange hex nuts with a certified torque gun until they are tight.

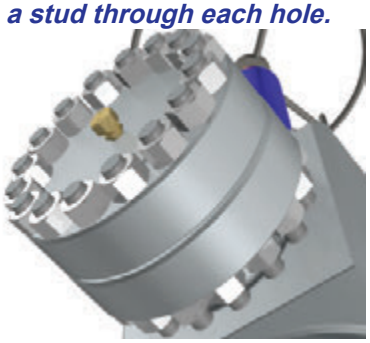

5. Be sure the Alemite fittings are on and tight.

PROPRIETARY BOOKLET OF VALVEWORKS USA. DO NOT REPRODUCE WITHOUT EXPLICIT PERMISSION.

VALVEWORKS USA
WHEN PRESSURE DEMANDS QUALITY®

## Limited Product Warranty

The following limited warranty ("Limited Warranty") is exclusive and shall supersede all other warranties, whether express, implied or statutory, including, but not by way of limitation, any warranty of merchantability of fitness for any particular purpose. All other warranties or liabilities, expressed or implied, oral or statutory, including any warranty of merchantability or fitness for a particular purpose are hereby terminated and waived upon Purchaser purchasing any Products (as that term is defined herein) manufactured by **VALVEWORKS USA**.

**VALVEWORKS USA** hereby warrants to each original purchaser ("Purchaser") of material(s) or product(s) (hereinafter collectively referred to as "Products" or "Product(s)") manufactured by **VALVEWORKS USA** that such products are free from material and workmanship defects when operated under Normal Use (as defined herein) and Normal Service (as defined herein) for a period of one (1) year from the date of shipment ("Warranty Period"). This warranty is valid only for the original purchaser of the material(s) or product(s), and is non-transferrable. "Normal Use" shall mean the intended use of the product for which it was designed by **VALVEWORKS USA**. "Normal Service" shall mean the necessary servicing as suggested or required by **VALVEWORKS USA**, industry standards, or applicable laws and regulations.

THIS WARRANTY WILL BE NULL AND VOID FOR THE FOLLOWING PRODUCTS:

- Other than testing during testing processes by **VALVEWORKS USA** in accordance with industry rules and regulations, any Product(s) that has been tested to, or subjected to, any pressure greater than the stated product working pressure* at any time, other than by **VALVEWORKS USA** during testing processes per industry rules and regulations. **PRODUCTS SHOULD NEVER BE TESTED / SUBJECTED TO PRESSURE GREATER THAN THE STATED PRODUCT WORKING PRESSURE*. THIS IMMEDIATELY VOIDS THIS LIMITED WARRANTY, AND IS AN EXTREMELY DANGEROUS SAFETY RISK.**
- Any product repaired, altered, or modified by any contractor, laborer, person or entity that has not been authorized in writing by **VALVEWORKS USA**.
- Any product, in **VALVEWORKS USA's** reasonable judgment, that has been subject to negligence, accident, improper storage, or improper handling by any person(s).
- Any product which has not been operated or maintained in accordance with normal practices and in conformity with the manufacturer's recommendations, industry standards, and operation and maintenance specifications of **VALVEWORKS USA**.

***Stated Product Working Pressure** is defined as "the maximum internal pressure that the equipment is designed to contain and / or control"

**Under any circumstances where this Limited Warranty is voided on any Product(s) manufactured and supplied by VALVEWORKS USA, VALVEWORKS USA is immediately excluded from any and all liabilities associated with such Product(s).**

For gate valves used in extreme service conditions such as "frac" applications, **VALVEWORKS USA** recommends full lubrication of the gate valve body cavity and bonnet assemblies between each frac stage (or zone). Failure to comply with this recommendation COULD result in warranty claims being denied. Custom orders, or orders where modifications are made to **VALVEWORKS USA** products by **VALVEWORKS USA** per the purchaser's request to the purchaser's design criteria, and do not conform to **VALVEWORKS USA** design criteria, are subject to review at the time of contract review to determine whether warranty coverage applies to that particular order. Unless specified otherwise in writing at the time of order placement, warranty coverage will NOT apply to the aforementioned type(s) of order(s).

PROPRIETARY BOOKLET OF VALVEWORKS USA. DO NOT REPRODUCE WITHOUT EXPLICIT PERMISSION.

**VALVEWORKS USA** obligations under this Limited Warranty consist of, and shall be expressly limited to, reasonable efforts to repair, replace or, at **VALVEWORKS USA'S** sole option, refund the purchase price. The cost of labor for installing a Product that has been repaired or replaced shall be borne by Purchaser. Replacement parts provided under the terms of this Limited Warranty are covered by this Limited Warranty for the remainder of the Warranty Period, and no obligations fulfilled under the terms and conditions of this Limited Warranty shall ever extend the Warranty Period. Limited Warranty services provided hereunder shall not give rise to any kind of liability that may be caused by the delays in **VALVEWORKS USA** performing its obligations under this Limited Warranty.

The remedy for claims against **VALVEWORKS USA** for any breach of this Limited Warranty shall be limited to the replacement of any product that was proven defective in material or workmanship. Such remedy shall only be available upon written notice to **VALVEWORKS USA** of such defect within thirty (30) days of delivery of the Product(s), and the return of such Product(s) to **VALVEWORKS USA** at the address provided herein for written notice. Costs of labor, freight, drayage, or other similar charges shall be at the expense of the customer.

Please contact **VALVEWORKS USA** at 1-318-425-0266 prior to returning any Product(s) covered by this Limited Warranty. Upon determination that a Limited Warranty claim is valid, **VALVEWORKS USA** shall issue a return authorization number. **HOWEVER, THE DELIVERY OF AN ALLEGEDLY DEFECTIVE PRODUCT NOT BEARING A VALID RETURN AUTHORIZATION NUMBER WILL BE REFUSED, AND THE SHIPMENT WILL BE RETURNED TO THE SENDER AT THE SENDER'S EXPENSE.** Except as specifically provided herein, any Purchaser hereby waives the right to seek claims, damages or other legal or equitable remedies against or from **VALVEWORKS USA**, its principals, subcontractors, agents, vendors, suppliers and/or design professionals under any and all causes of action whether statutory, at common law or at equity, including but not limited to any claims based on implied warranties of fitness, redhibition, reduction of the purchase price, negligence and/or strict liability. The agreements and remedies contained in this Limited Warranty are the sole remedies available to any Purchaser as to the issues raised herein, shall be enforceable to the fullest extent permissible by applicable state and federal law, and shall apply to any claim thereafter made against VALVEWORKS USA or any other person related to any **VALVEWORKS USA** Products. Purchaser's sole remedy is as prescribed in the terms and conditions of this Limited Warranty document. In no event shall **VALVEWORKS USA**, its agent(s), or employees be liable for any injuries or damages to any person or property whatsoever, or for any special, indirect, secondary, or consequential damage of any nature however arising. By Purchaser purchasing any Products from **VALVEWORKS USA**, Purchaser agrees (without any further action required by **VALVEWORKS USA** or Purchaser) to all remedies, waivers and limitations of warranty set forth herein.

Written Notice: Any written notice shall be sent to 1650 Swan Lake Road, Bossier City, Louisiana 71111.

The obligations of **VALVEWORKS USA** under this Limited Warranty are limited by the terms and conditions provided herein.

This warranty is limited in extent to the warranty, if any, which the user receives from the manufacturer(s) of any component part(s) or buyout items for resell. All other warranties or liabilities, expressed or implied, oral or statutory, including any warranty of merchantability or fitness for a particular purpose are expressly denied. In no event shall VALVEWORKS USA, its agent(s), or employees be liable for injury or damage to any person or property whatsoever or for any special, indirect, secondary, or consequential damage of any nature however arising.

## ORDERS POLICY

All orders for Product(s) are subject to acceptance by **VALVEWORKS USA**, and such acceptance shall not be unreasonably withheld. Prices are subject to change without notice and any errors in published or quoted prices are subject to correction. No Product(s) may be returned for credit without written authorization from **VALVEWORKS USA**. Credit will not be issued for Product(s) after the Warranty Period. **VALVEWORKS USA** reserves the right to deduct reconditioning and handling charges when issuing credit for returned material(s) or product(s). Products of special design, not considered "standard" to the **VALVEWORKS USA** product line, will not be permitted to be returned.

PROPRIETARY BOOKLET OF VALVEWORKS USA. DO NOT REPRODUCE WITHOUT EXPLICIT PERMISSION.

VALVEWORKS USA
WHEN PRESSURE DEMANDS QUALITY®

## DIMENSION TABLE KEY

| | |
|---|---|
| A | FLANGE TO FLANGE |
| B | VALVE BORE SIZE |
| C | BORE CENTERLINE TO BOTTOM |
| D | BORE CENTERLINE TO TOP |
| E | HANDWHEEL DIAMETER |
| NT | NUMBER OF TURNS |
| WT | APPROXIMATE WEIGHT |

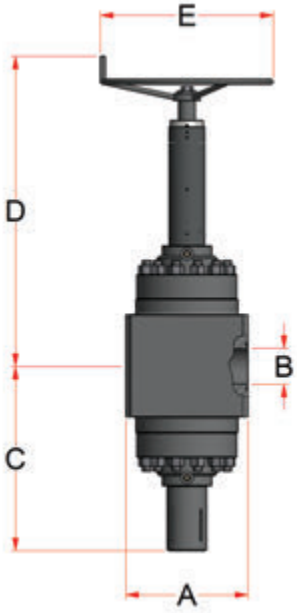


STUDDED

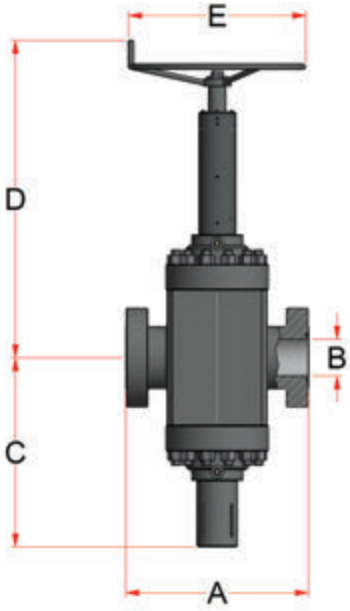


FLANGED

## STUDDED GATE VALVES

| SIZE | WP (PSI) | A | B | C | D | E | NT | WT |
|---|---|---|---|---|---|---|---|---|
| 7 1/16 | 10K | 24 | 7 1/16 | 36 1/2 | 61 1/4 | 34 | 17 3/4 | 3750 |
| 7 1/16 | 15K | 24 | 7 1/16 | 36 1/2 | 61 1/4 | 34 | 17 3/4 | 3725 |

## FLANGED GATE VALVES

| SIZE | WP (PSI) | A | B | C | D | E | NT | WT |
|---|---|---|---|---|---|---|---|---|
| 7 1/16 | 10K | 35 | 7 1/16 | 36 1/2 | 61 1/4 | 34 | 17 3/4 | 3700 |
| 7 1/16 | 15K | 40 5/8 | 7 1/16 | 36 1/2 | 61 1/4 | 34 | 17 3/4 | 4550 |

PROPRIETARY BOOKLET OF VALVEWORKS USA. DO NOT REPRODUCE WITHOUT EXPLICIT PERMISSION.

VALVEWORKS USA
WHEN PRESSURE DEMANDS QUALITY®


1650 SWAN LAKE ROAD
BOSSIER CITY, LA USA 71111

| | |
|---|---|
| PHONE | 318-425-0266 |
| FAX | 318-425-0934 |
| TOLL FREE | 888-425-0266 |
| EMAIL | SALES@VWUSA.US |
| WEBSITE | WWW.VALVEWORKSUSA.COM |



PROPRIETARY BOOKLET OF VALVEWORKS USA. DO NOT REPRODUCE WITHOUT EXPLICIT PERMISSION.