VALVEWORKS USA

WHEN PRESSURE DEMANDS QUALITY®

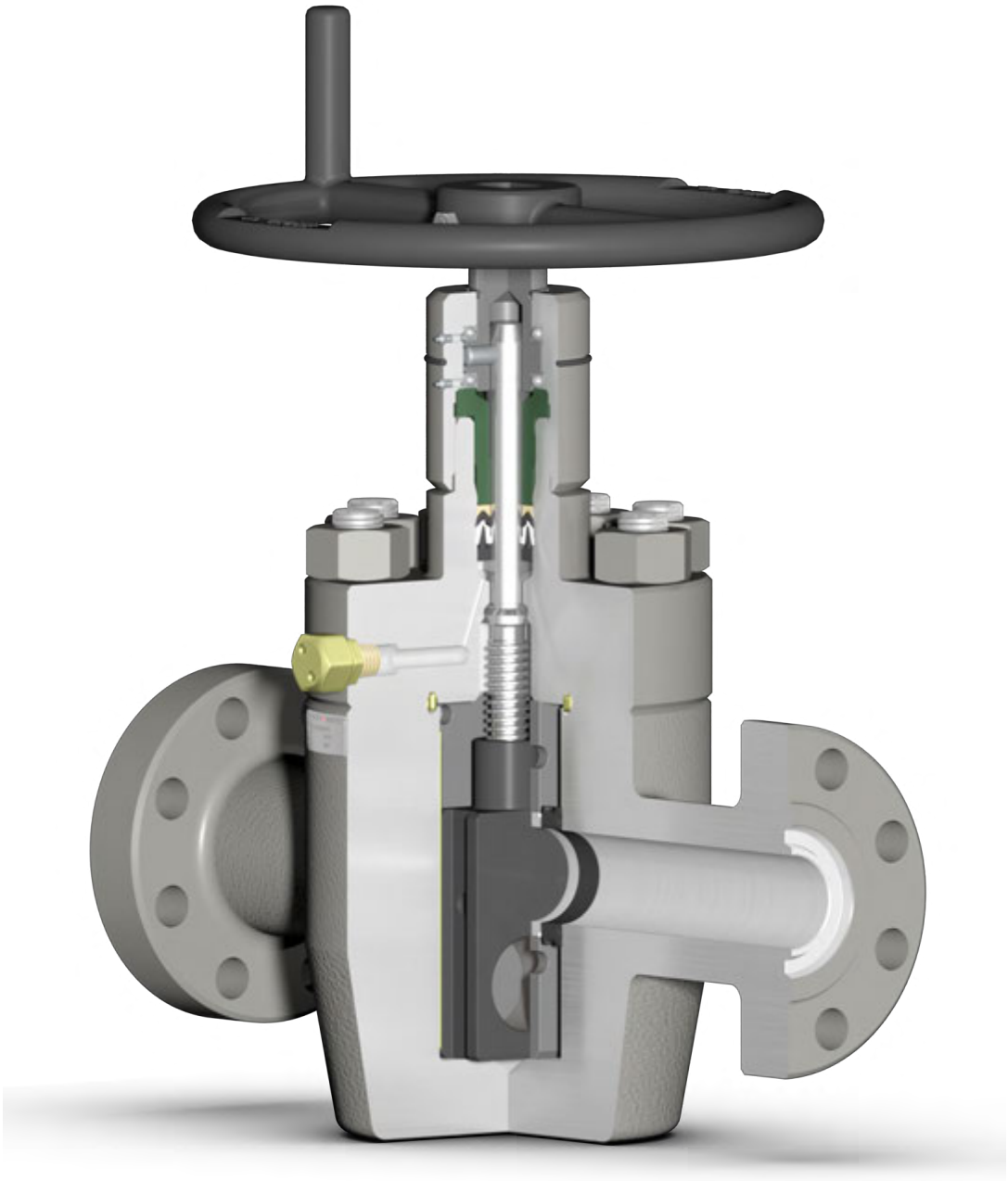

MODEL FC GATE VALVE
SERVICE AND OPERATION MANUAL

PROPRIETARY BOOKLET OF VALVEWORKS USA. DO NOT REPRODUCE WITHOUT EXPLICIT PERMISSION.

SALES@VWUSA.US WWW.VALVEWORKSUSA.COM

VALVEWORKS USA
WHEN PRESSURE DEMANDS QUALITY®

INTRODUCTION

In appreciation to our customer for purchasing our product, we have prepared this Operation Manual to assist you in the Operation, Maintenance, Assembly and Installation of the Valveworks USA API 6A Model FC Gate Valve. We encourage following the recommendations in this booklet to attain the best possible service from our product, which is designed and proven to offer the service one can expect of a quality product.
To contact a representative for more specific information pertaining to a special problem:

VALVEWORKS USA
WHEN PRESSURE DEMANDS QUALITY®

1650 SWAN LAKE ROAD
BOSSIER CITY, LA USA 71111

PHONE	318-425-0266
FAX	318-425-0934
TOLL FREE	888-425-0266
EMAIL	SALES@VWUSA.US
WEBSITE	WWW.VALVEWORKSUSA.COM

QUALITY

Valveworks USA management and employees are committed to continually improve the effectiveness of our quality management system to produce a quality assured product which meets or exceeds our customer's expectations and requirements.

SAFETY

Caution must be taken as to the surrounding area and its potential dangers of projectiles.
Pressure kills! Even a loose, stand alone valve may contain trapped pressure which will turn any component into a projectile missile when disassembled, causing injury or death. Never stand over a component or in its path of release during assembly. Always operate the valves from the open to close position slowly releasing trapped pressure. Always remove fittings first, taking extreme caution to their potential danger as a projectile. If the valve is frozen and can not be operated, take extreme caution to the disassembly of the components. Caution should be taken when handling components during disassembly and assembly, as most components are heavy, greasy, hard to handle and have edges which can cause injury. Always be cautious of how the valve is positioned and standing. Be sure the valve is secured in position so there is no possible chance of tipping over. Never apply test pressure above the manufacturers rated working pressure. The shell test pressure above the working pressure has already been tested by the manufacturer and is not required after the initial assembly test of the valve. The manufacturer has already verified the quality of the valve shell body components and will void the warranty from the manufacturer if the valve is pressure tested above the rated working pressure indicated for the valve. Always wear steel toes shoes, hard hat, eye and ear protection while performing repairs.

PROPRIETARY BOOKLET OF VALVEWORKS USA. DO NOT REPRODUCE WITHOUT EXPLICIT PERMISSION.

VALVEWORKS USA
WHEN PRESSURE DEMANDS QUALITY®

TABLE OF CONTENTS

APPLICATIONS	4
TEMPERATURE RATING	4
TRIM CHART	4
ORDERING INFORMATION	5
OPERATION	5
ASSEMBLY DRAWING / BOM	6-8
DISASSEMBLING THE BODY	9
DISASSEMBLING THE BONNET SUB-ASSEMBLY	10
PERIODIC MAINTENANCE	11-12
PROCEDURE TO VENT OR DRAIN	12-13
TROUBLESHOOTING	13
MAINTENANCE INTERVALS	13
TEST PROCEDURE	14
HYDROSTATIC SEAT TEST	15
VISUAL INSPECTION	16
FIELD HOOK UP INSTRUCTIONS	16
REPLACING BROKEN SHEAR PIN	17
BACK SEATING PROCEDURE	18

PROPRIETARY BOOKLET OF VALVEWORKS USA. DO NOT REPRODUCE WITHOUT EXPLICIT PERMISSION.

VALVEWORKS USA
WHEN PRESSURE DEMANDS QUALITY®

APPLICATIONS

Valveworks USA Model FC gate valves can be applied to the following sizes and working pressures.

APPLICATION	OPTIONS AVAILABLE
GATE VALVE SIZE	1-13/16, 2-1/16, 2-9/16, 3-1/8, 3-1/16, 4-1/16
MAXIMUM ALLOWABLE WORKING PRESSURE (MAWP)	3M, 5M, 10M, 15M
TEMPERATURE RANGE	-18°C TO 180°C (0°F TO 350°F)

The Model FC Gate Valves covered in this manual are suitable for performance requirement levels 1 and 2, PR1 and PR2 respectively.

TEMPERATURE RATING

TEMPERATURE CLASSIFICATION	OPERATING RANGE			
	°C		(°F)	
K	-60	82	-75	180
L	-46	82	-50	180
N	-46	60	-50	140
P	-29	82	-20	180
S	-18	60	0	140
T	-18	82	0	180
U	-18	121	0	250
V	2	121	35	250
X	-18	180	0	350

TRIM CHART

MATERIAL CLASS	MINIMUM MATERIAL REQUIREMENTS	
	BODY, BONNET, END AND OUTLET CONNECTIONS	PRESSURE-CONTROLLING PARTS, STEMS, AND MANDREL HANGERS
AA - General Service	Carbon or low-alloy steel	Carbon or low-alloy steel
BB - General Service	Carbon or low-alloy steel	Stainless steel
CC - General Service	Stainless steel	Stainless steel
DD - Sour Service [a]	Carbon or low-alloy steel [b]	Carbon or low-alloy steel [b]
EE - Sour Service [a]	Carbon or low-alloy steel [b]	Stainless steel [b]
FF - Sour Service [a]	Stainless steel [b]	Stainless steel [b]
HH - Sour Service [a]	CRAs [b]	CRAs [b]

[a] As defined by NACE MR0175.
[b] In compliance with NACE MR0175.

As shown by API-6A. For specific details, consult Valveworks USA.

PROPRIETARY BOOKLET OF VALVEWORKS USA. DO NOT REPRODUCE WITHOUT EXPLICIT PERMISSION.

VALVEWORKS USA
WHEN PRESSURE DEMANDS QUALITY®

ORDERING INFORMATION

The following information should be provided with any request for quote or order placement of Valveworks USA Model FC Gate Valves:

- **Model of Valve**
- **Size of Valve**
- **Pressure Rating (Maximum)**
- **API 6A Requirements (PR-PSL)**
- **API 14D Requirements (Class of Service)**
- **Temperature Rating (API 6A)**
- **Material (API 6A)**
- **Any Special Test Requirements**
- **Any Special Material Requirements**
- **Any Special Coating or Protection Requirements**
- **Other Specifications and/or Certifications**

OPERATION

Valveworks USA Model FC gate valves are hand wheel operated (HWO) valves. The gate of the Model FC valve is a one piece slab gate that uses two floating seats to generate a highly reliable seal. The slab gate eliminates the chance of trapping pressure within the body cavity which can cause pressure locking.

Below are some steps which have to be followed at all times:

- **Fully open the valve before installing or shipping. The sealing area of the gates, in the full open position, is protected by the body and is less likely to be damaged.**
- **To hydrostatically test the valve body to working pressure, the valve *must be* in a partially open position. When testing the valve in the closed position (seat test) *do not* exceed the working pressure stamped on the valve identification plate.**
- **During storage always leave the valve in the *fully opened* position. This will *prevent* damage to the sealing area of both the gate and seats.**
- **The stem bearings can be replaced while the valve is in service. Safety precautions must be taken before work is conducted. A minimum of two safety barriers must be used.**
- **When lubricating the body do not exceed the maximum API working pressure stamped on the identification plate.**
- **The valve should be *fully opened* or *fully closed* during lubrication of the body or seats.**
- **Seat lubrication pressures should not exceed the maximum allowable working pressure of the valve. Cycling the valve during the greasing operation will help displace the old grease with the new.**
- **This method of operation will prevent damage to the sealing surfaces of the gate and seats, and will increase the life of the valve.**

PROPRIETARY BOOKLET OF VALVEWORKS USA. DO NOT REPRODUCE WITHOUT EXPLICIT PERMISSION.

VALVEWORKS USA
WHEN PRESSURE DEMANDS QUALITY®

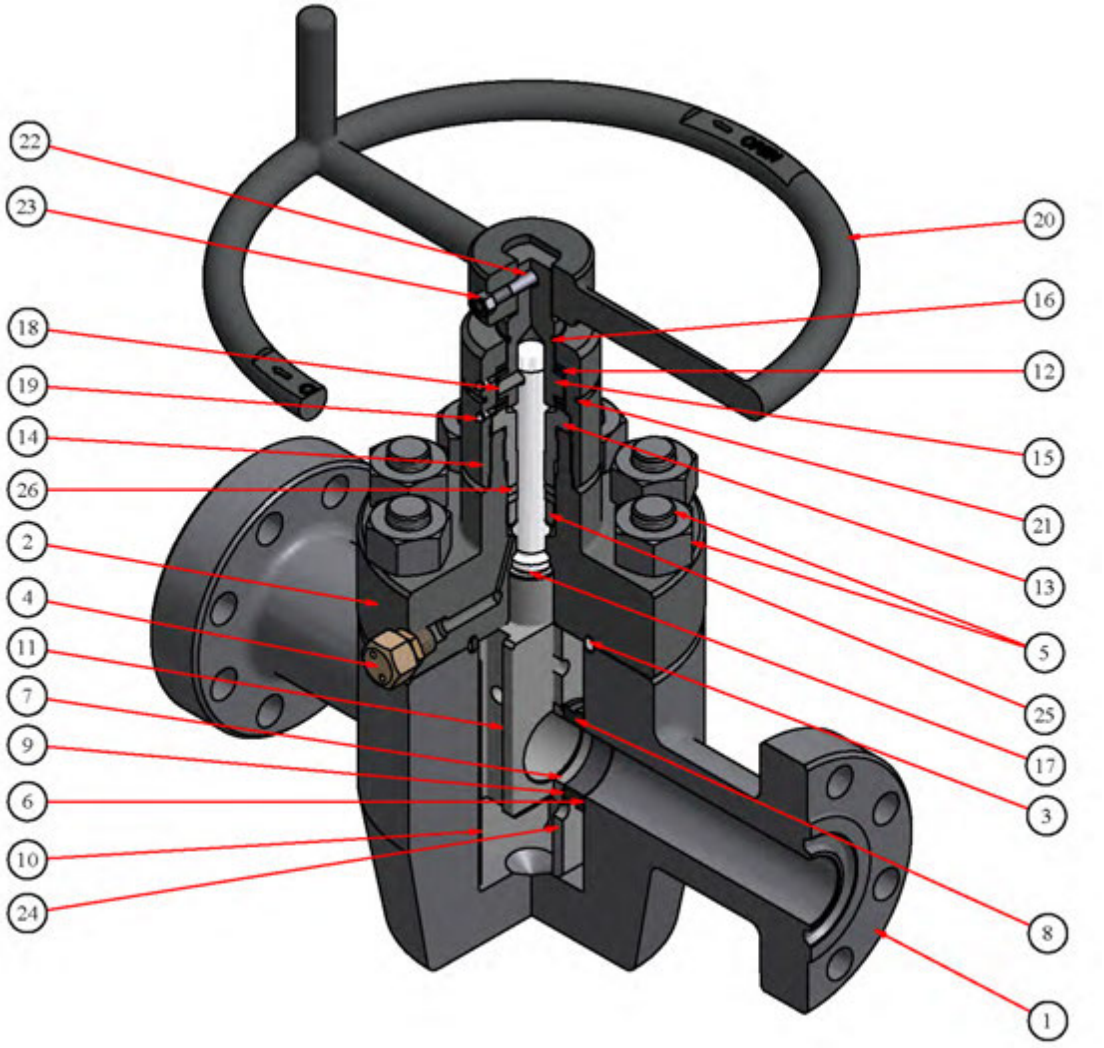

MODEL FC - SLAB GATE
2-1/16” 10M
(HANDWHEEL OPERATED)

PROPRIETARY BOOKLET OF VALVEWORKS USA. DO NOT REPRODUCE WITHOUT EXPLICIT PERMISSION.

VALVEWORKS USA
WHEN PRESSURE DEMANDS QUALITY®

MODEL FC - BILL OF MATERIALS		
ITEM	DESCRIPTION	QTY
1	BODY	1
2	BONNET	1
3	BONNET SEAL RING	1
4	BODY GREASE FITTING	1
5	STUDS AND BOLTS	8
6	BODY BUSHING SEAL	2
7	SEAT	2
8	BODY BUSHING	2
9	SEAT SEAL	2
10	GATE GUIDE	2
11	GATE SLAB	1
12	TORRINTION BEARINGS	2
13	PACKING GLAND	1
14	BEARING CAP	1
15	STEM ADAPTER	1
16	STEM ADAPTER 0-RING	1
17	STEM	1
18	SHEAR PIN	1
19	GREASE ALEMITE FITTING	2
20	HANDWHEEL	1
21	BEARING CAP O-RING	1
22	HANDWHEEL BOLT	1
23	HANDWHEEL NUT	1
24	RETAINING PLATE	2
25	OPTI-SEAL	1
25	BACK-UP RING	2

PROPRIETARY BOOKLET OF VALVEWORKS USA. DO NOT REPRODUCE WITHOUT EXPLICIT PERMISSION.

VALVEWORKS USA
WHEN PRESSURE DEMANDS QUALITY®

PART NUMBER BREAKDOWN: 290 - A B X Y			
"A"	MAWP	"B"	BORE SIZE
5	5,000 PSI	1	1-13/16"
7	10,000 PSI	2	2-1/16"
8	15,000 PSI	3	3-1/8" (5M)
			3-1/16" (10M,15M)
		4	4-1/16"

The last two digits in the part number vary with "X" Material Type and "Y" Coating. The table below gives the different available material types and coatings. Please refer to the valve tag to know the material type and coating on the valve parts.

"X"	MATERIAL TYPE	"Y"	COATING
1	4130	0	NONE; PHOSPHATE, MOLY, STANDARD PAINT/COATING, POWDER COAT
1A	4140		
1B	1040		
1C	1018		
1D	1020		
1E	SA285-C	1	NITRIDE QPQ-PHOSPHATE; EXCEPTION - FC BODY BUSHING - DO NOT NITRIDE
1F	1026		
2	410SS FORGED		
2A	S42400		
3	174SS		
3A	NITRONIC 50	2	HARDFACE-STELLITE #6 SPRAY & FUSE
4	316SS		
4A	316/304SS		
4B	304SS	3	HARDFACE - TUNGSTEN CARBIDE
5	BRONZE		
6	INCONEL 718		
6A	INCONEL 725	4	HARDFACE - COLMONOY #5
6B	INCONEL X750		
7	MONEL	5	ELECTROLIS NICKEL
8	A487-4D		
8A	A487-4C	6	WELD ON HARDFACE
8B	CA15		
8C	CF8M	7	ZINC PLATE
8D	CF3M	8	XYLAN COATING
8E	CA6NM	9	(4130) INCONEL 625 CLAD
9	STELLITE #6		
9A	PLASTIC	9A	(4130)SS-316-RING GROOVE
9B	STELLITE #3		

PROPRIETARY BOOKLET OF VALVEWORKS USA. DO NOT REPRODUCE WITHOUT EXPLICIT PERMISSION.

VALVEWORKS USA
WHEN PRESSURE DEMANDS QUALITY®

DISASSEMBLING THE VALVE

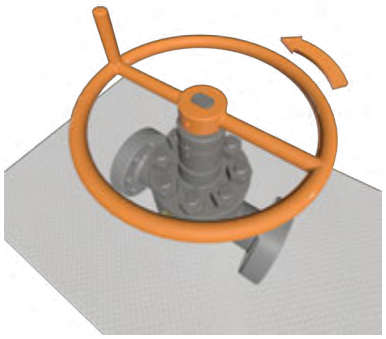

1. Operate the valve to insure no trapped pressure is present. Leave the gate set partially open.

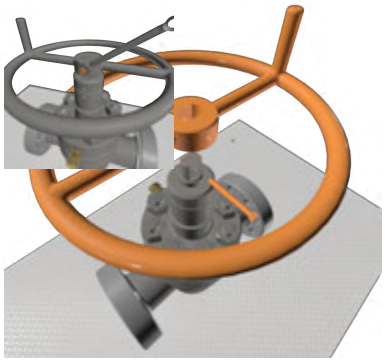

2. Unscrew and remove the Handwheel Nut using a wrench. Remove the Handwheel Bolt and the Handwheel.



3. Unscrew and remove all Bonnet Bolts using an impact wrench.

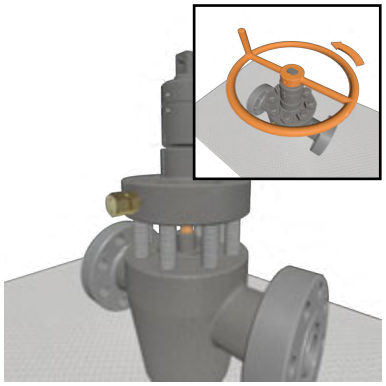

4. Replace the Handwheel and rotate it in the counter-clockwise direction. This will separate the Gate from the Stem.

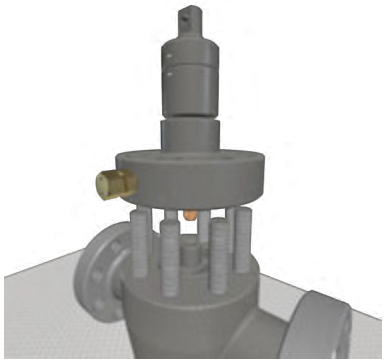

5. Remove the Bonnet Sub-Assembly

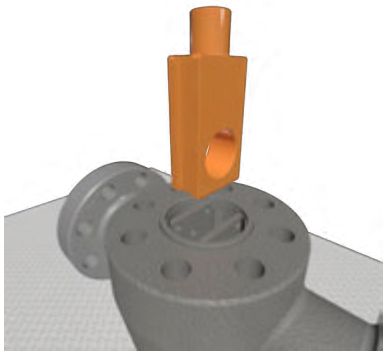

6. Remove the Gate.

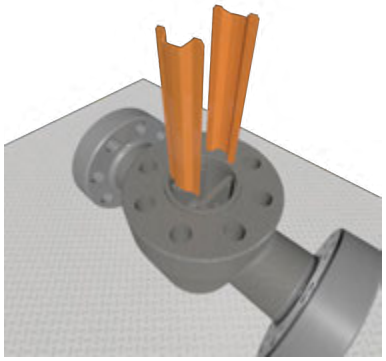

7. Remove the Gate Guides.

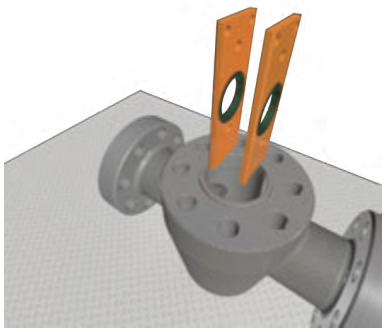

8. Remove the Retainer Plates and Seats.

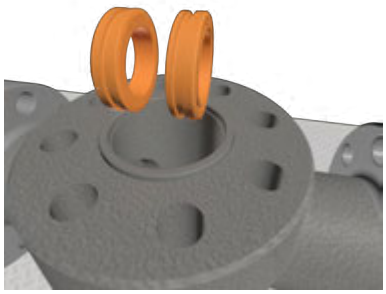

9. Remove the Body Bushings.

PROPRIETARY BOOKLET OF VALVEWORKS USA. DO NOT REPRODUCE WITHOUT EXPLICIT PERMISSION.

VALVEWORKS USA
WHEN PRESSURE DEMANDS QUALITY®

DISASSEMBLING THE BONNET SUB-ASSEMBLY

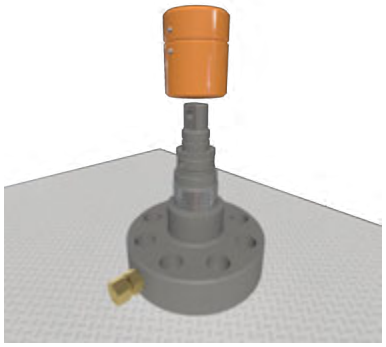

1. Unscrew and remove the Bearing Cap.

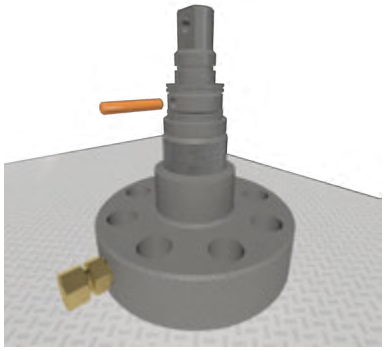

2. Remove the Shear Pin from the Stem Adapter.

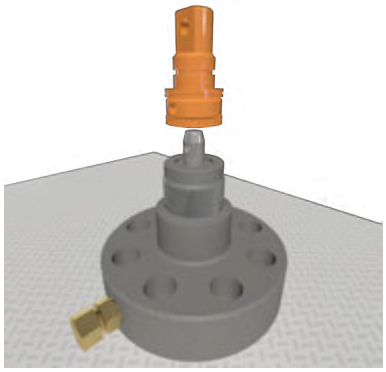

3. Remove the Stem Adapter.

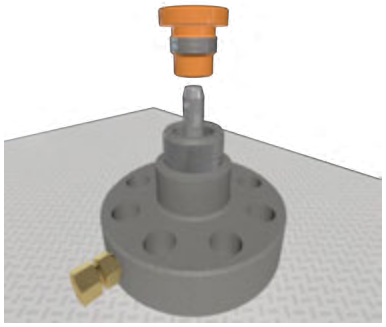

4. Unscrew and remove the Packing Gland.

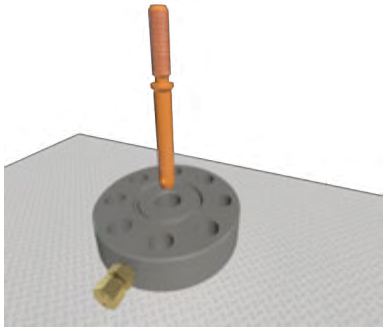

5.Remove the Stem.

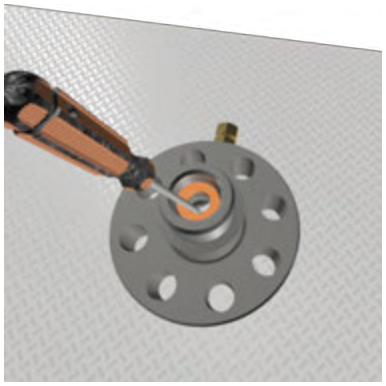

6. Remove the Stem Packing with a pick. Avoid scratching the internal wall of the Bonnet during removal of the packing.

NOTE:
Replace non-metalic seals while assembling the valve.

PROPRIETARY BOOKLET OF VALVEWORKS USA. DO NOT REPRODUCE WITHOUT EXPLICIT PERMISSION.

VALVEWORKS USA
WHEN PRESSURE DEMANDS QUALITY®

PERIODIC MAINTENANCE

The Model FC gate valves are non-lubricated sealed valves, in that they do not require the injection of lubricants or sealants to effectively seal. However, to prevent corrosion, excessive wear and ensure continued operation, a normal amount of lubrication is recommended to extend the life and serviceability of the valve.

MAINTENANCE TOOLS

To perform normal maintenance and lubrication, the following tools are recommended:



Grease pump with adapter and coupling



Safety pressure releasing tool

STEM BEARING LUBRICATION

Valveworks USA API valves are equipped with alemite hydraulic type 1/8" NPT bonnet grease fittings. Stem bearing lubrication is accomplished through this fitting using a standard type grease gun. Any good grade No. 3 grease is recommended for this lubrication. Stem bearings normally do not require great amounts of grease.

CAUTION:

If bearings should need to be changed, the valve must be removed from service.

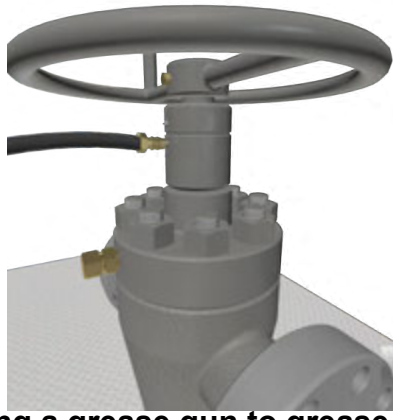

An example of using a grease gun to grease the stem bearings.
If too much lubrication should occur, excess grease will flow around the stem to the atmosphere.

PROPRIETARY BOOKLET OF VALVEWORKS USA. DO NOT REPRODUCE WITHOUT EXPLICIT PERMISSION.

VALVEWORKS USA
WHEN PRESSURE DEMANDS QUALITY®

VENTING OR DRAINING A VALVE

Most products contain a certain amount of water, lime scale, sediment and other foreign matter which tend to accumulate in the valve body. A routine maintenance program will increase the life of a valve against damage caused by:

1) Water freezing in the body cavity, causing damage to the body.
2) An accumulation of foreign matter in the lower part of the body that could prevent the valve from fully closing; resulting in a throttling action that may cause inefficient sealing.
3) Foreign matter trapped in the body may become lodged between the sealing surfaces of the gate and seats, resulting in scored or damaged sealed.

PROCEDURE TO VENT OR DRAIN



1. Place the valve gate in a fully open (shown) or fully closed position.

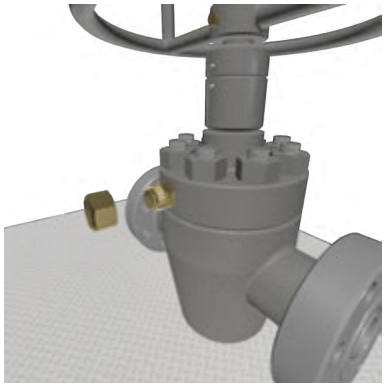

2. Remove the safety cap from the bonnet grease fitting.

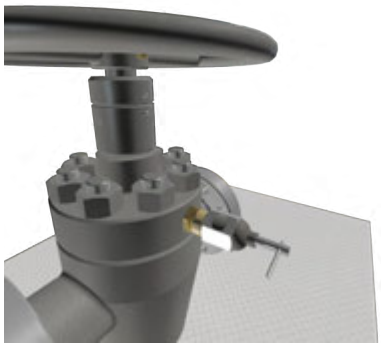

3. Attach the pressure release tool.

CAUTION:

Remove the safety cap slowly to allow the ball check to sufficiently seal and avoid uncontrolled venting. Should the ball check fail to seal properly, pressure will continue to blow through the safety cap orifices. You should then retighten the safety cap and discontinue maintenance on the valve. Report the findings and set up a service job for the repair. A certified repair tech needs to be used to repair the valve.



4. Screw the stem of the releasing tool into the fitting forcing the ball check off its seat. The valve will vent and drain once the ball check is unseated.

PROPRIETARY BOOKLET OF VALVEWORKS USA. DO NOT REPRODUCE WITHOUT EXPLICIT PERMISSION.

VALVEWORKS USA
WHEN PRESSURE DEMANDS QUALITY®

A regulatory scheduled greasing program is the most positive way to prevent problems caused by foreign matter in the valve. However, if a regular draining program cannot be followed, it is recommended that valves be drained after the following operations:

- After a well has come in and has been cleaned up.
- After a mudding operation.
- After a cementing operation.
- Anytime the valve seems hard to operate by hand and will not fully open or close by the required number of hand wheel turns.
- When the valve is hard to operate from the fully open or fully closed position because it is "pressure locked" or "Iced-up".

"ICED-UP" is a condition caused by a restriction in the flow or a differential in the pressure of gas flow at high pressure, which produces extremely low temperatures.

This happens by leakage of a closed valve or leakage through the stem packing. Valves in service on gas containing hydrates or in fresh water service, which are exposed to low external temperatures can also get "iced-up". In this case it is advisable to inject alcohol or glycol into the valve body through the drain fitting to combat these conditions.

The same procedures are used for injecting alcohol or glycol as are used for valve body lubrication. Do not operate the valve immediately after injecting as these fluids should be retained in the body to perform the Antifreeze effect.

TROUBLESHOOTING

PROBLEM	CAUSE	SOLUTION
Handwheel backoff allows the gate to float	Handwheel	Grease valve body and cycle valve open to closed. If leak is still present, then remove the valve from service.
Leakage when closed	Seats	Disconnect from service and check for the condition of the seats.
Leakage between body and bonnet	Bonnet Seal Ring	Disconnect from service and replace the bonnet seal ring.
Leakage observed from the bearing cap	Packing	Disconnect from service and replace the packing.
Leakage at flange	Flange Seal Ring	Disconnect from service and replace the flange seal ring.
Handwheel spins freely	Broken Shear Pin	Replace broken shear pin as explained below.

MAINTENANCE INTERVALS

PROCEDURE	RECOMMENDED INTERVAL
Vent or Drain	See Page 12
Cycle Open to Close	Semi-Annually
Disconnect and Test	Annually

PROPRIETARY BOOKLET OF VALVEWORKS USA. DO NOT REPRODUCE WITHOUT EXPLICIT PERMISSION.

VALVEWORKS USA
WHEN PRESSURE DEMANDS QUALITY®

TEST PROCEDURE

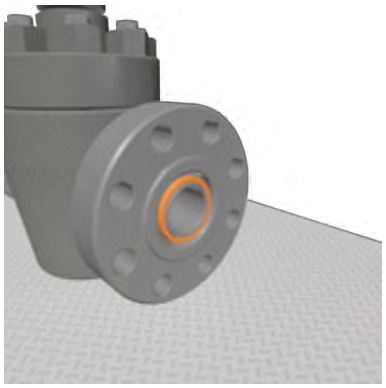

1. Lightly oil ring groove. Grease and insert a ring joint into the body flange.

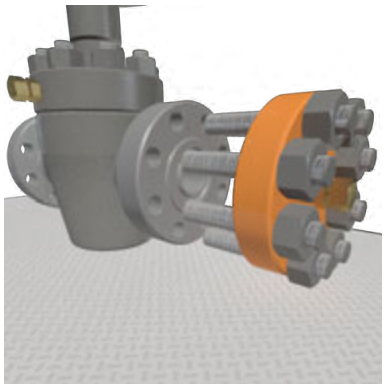

2. Be sure that the test flange has a tightened grease fitting, all of its studs, and a nut on each with all of the nuts on the grease fitting side.

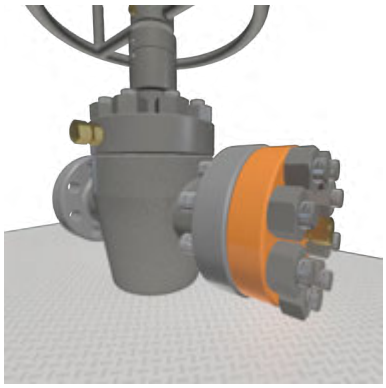

3. Align the test flange studs with the body flange holes. Then, push the test flanges, its studs, and their hex nuts onto the body flange.

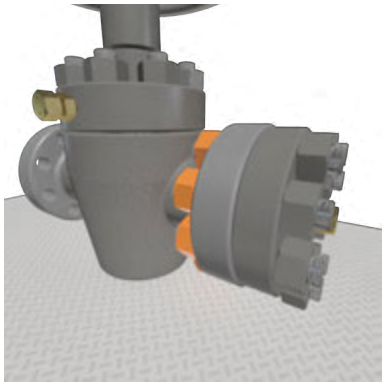

4. Screw a hex nut on the vacant side of each stud until all of the studs have a nut connecting the test flange to the body flange.

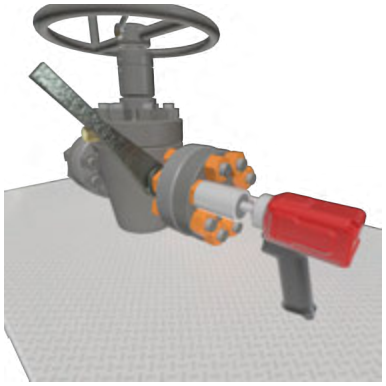

5. Tighten the hex nuts on the test flange side with an impact wrench until they are tight.

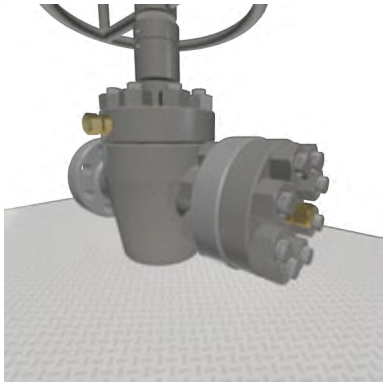

6. A finished flange shown.

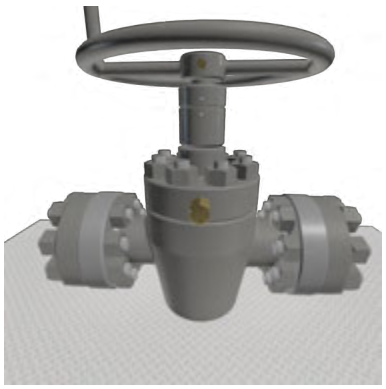

7. Repeat steps 1-5 for the opposite flange.

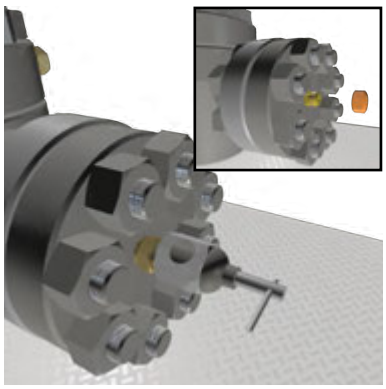

8. Remove the grease fitting cap from one test flange and attach a pressure release tool.

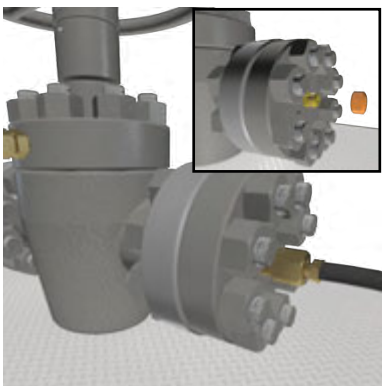

9. Remove the grease fitting cap from the opposite test flange and attach the flow line.

PROPRIETARY BOOKLET OF VALVEWORKS USA. DO NOT REPRODUCE WITHOUT EXPLICIT PERMISSION.

VALVEWORKS USA
WHEN PRESSURE DEMANDS QUALITY®

HYDROSTATIC SEAT TEST

- With the valve closed, apply the rated working pressure.
- Hold and monitor at that pressure for at least (3) minutes.
- Open the valve, and bleed off the pressure until it's reduced to zero. Then, close the valve and the pressure release tool.
- Repeat the steps above.

Switch the sides of your flow and pressure release connections, bleed off the new pressure release side, and repeat steps above to perform a seat test on the new flow side.

The valve is acceptable if no leakage is visible during the holding period.

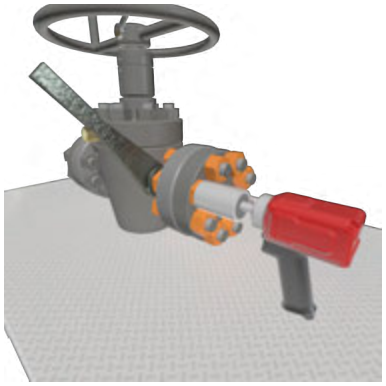

1. While holding the hex nuts on the body flange, loosen each of the test flange hex nuts.

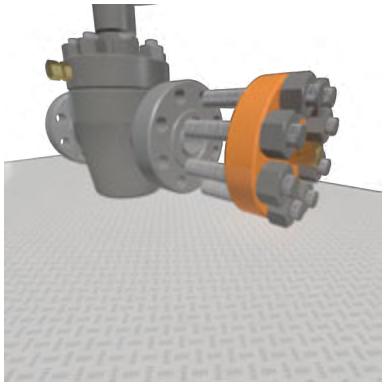

2. After removing the body flange hex nuts, you can remove the test flange, its studs, and their hex nuts.

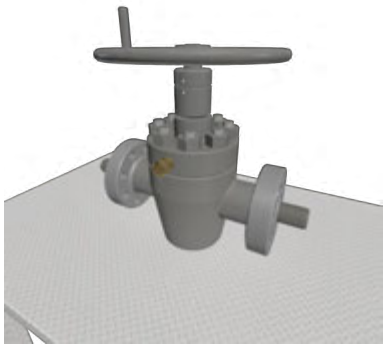

3. Pass a drift mandrel through the valve bore after the valve has been assembled, operated, and pressure tested.

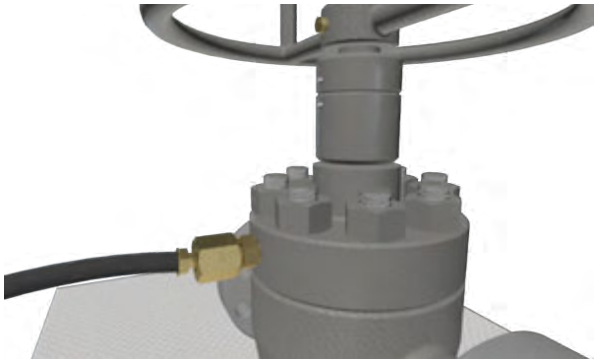

4. Remove the bonnet grease fitting cap, and attach a flow line from the grease pump to the bonnet grease fitting. Grease until any remaining water from testing drains from the valve.

PROPRIETARY BOOKLET OF VALVEWORKS USA. DO NOT REPRODUCE WITHOUT EXPLICIT PERMISSION.

VALVEWORKS USA
WHEN PRESSURE DEMANDS QUALITY®

VISUAL INSPECTION

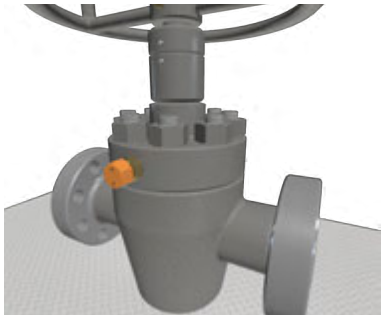

1. Be sure the bonnet grease fitting cap is on and tight.

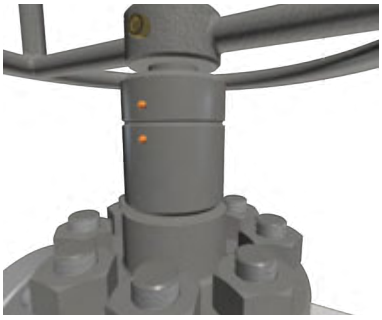

2. Be sure the Alemite fittings are on and tight.

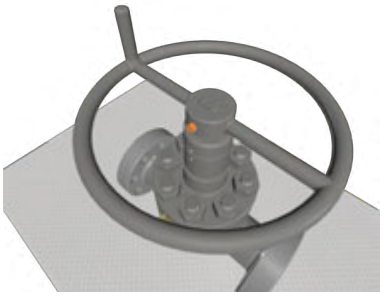

3. Be sure the Hand wheel Nut is tight.



4. The gate must be fully open (shown) or fully closed.

FIELD HOOK-UP INSTRUCTIONS

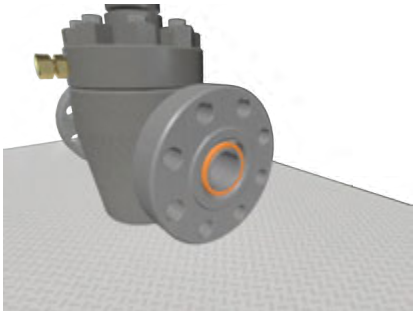

1. Lightly oil ring groove.
Grease and insert a ring joint into the body flange.

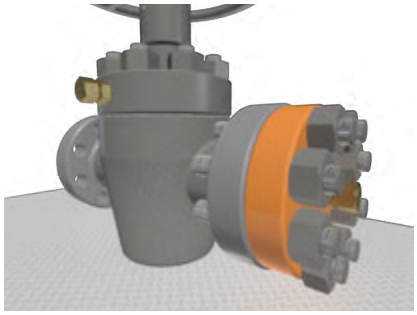

2. Align the service flange holes with the body flange holes. Push a stud through each aligned hole until there is a stud through each hole.

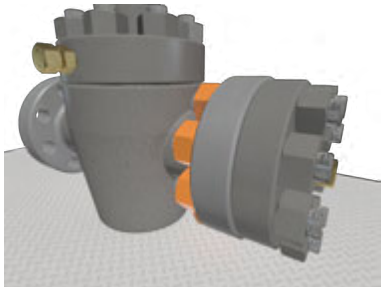

3. Screw a hex nut on both sides of each stud by hand.

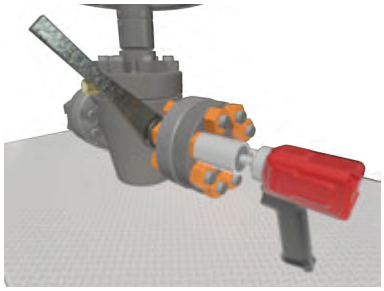

4. Torque the service flange hex nuts with a certified torque gun or wrench until tight.

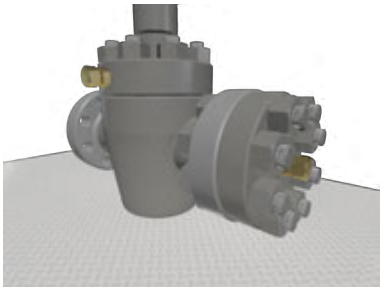

5. A finished flange should appear as shown.

PROPRIETARY BOOKLET OF VALVEWORKS USA. DO NOT REPRODUCE WITHOUT EXPLICIT PERMISSION.

VALVEWORKS USA
WHEN PRESSURE DEMANDS QUALITY®

REPLACING BROKEN SHEAR PIN (WHILE IN SERVICE)

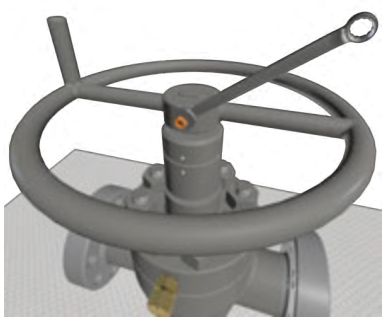

1. Unscrew and remove the Handwheel Nut using a wrench.

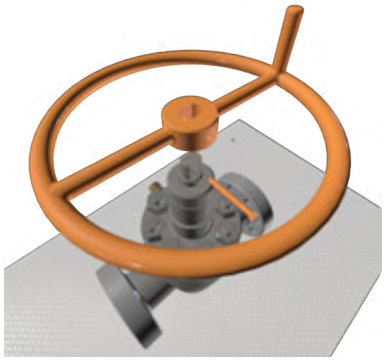

2. Remove the Handwheel Bolt and the Handwheel.

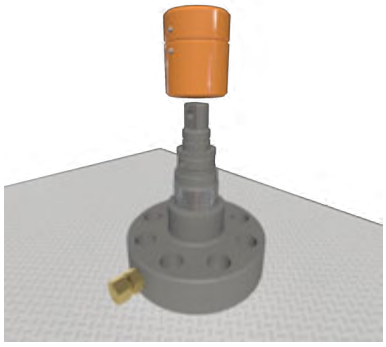

3. Unscrew and remove the Bearing Cap.

Note:

a) If Bearing Cap tries to remove the packing gland hit the stem adapter firmly to break any gunk build up.
b) If the Bearing Cap will not remove without unthreading the packing gland, then pressure must be removed from the valve or the valve MUST be back seated.

c) Once Bearing Cap is free or Valve is back seated go to step 4.

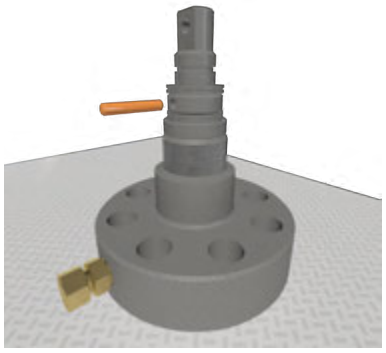

4. Once Bearing Cap is removed, replace damaged shear pin.

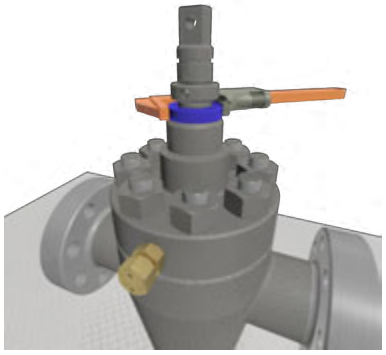

*5. Retighten packing gland with pipe wrench (~100 ft*lbf)*

Note: Debur with sandpaper if needed.

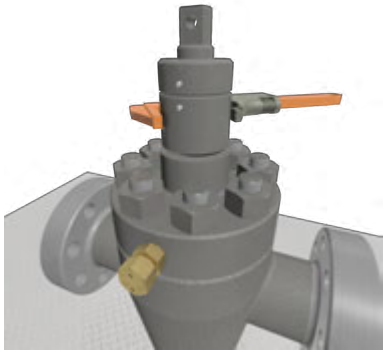

*6. Retighten bearing cap with pipe wrench (~100 ft*lbf)*

Note: Debur with sandpaper if needed.

CAUTION:

Never remove packing gland while valve is under pressure unless the pressure has been isolated.

PROPRIETARY BOOKLET OF VALVEWORKS USA. DO NOT REPRODUCE WITHOUT EXPLICIT PERMISSION.

VALVEWORKS USA
WHEN PRESSURE DEMANDS QUALITY®

BACK SEATING PROCEDURE

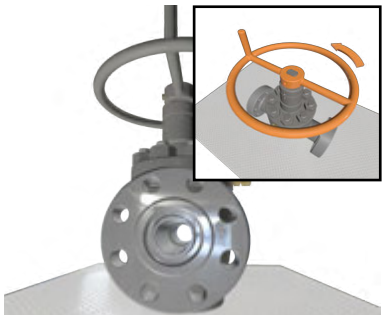

1. Turn the handwheel counter-clockwise until the gate is in the open position. (In case of Direct Operating gate)

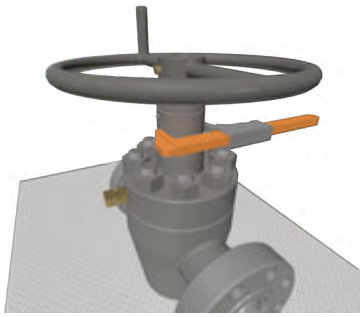

2. Loosen the bearing cap using a pipe wrench. (Approximately 3 1/2 - 4 turns)

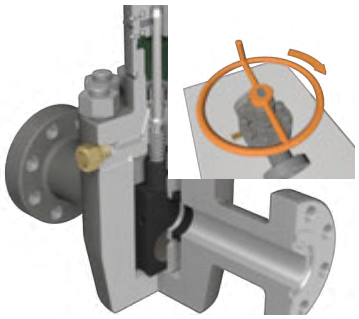

3. Turn the handwheel clockwise until the gate is in the closed position.

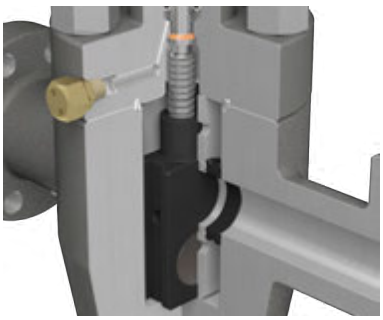

4. Over run the closed position such that the gate hits the bottom and rises the stem; which jams the back seat area.

WARNING:

1. **The backseat is only intended to be used in an emergency situation to stop packing leakage.**

2. **One of the features of the back seat is to change the stem packing under pressure on well, even though it is not promoted. It is always recommended that the valve be removed from service before packing is changed unless an emergency. If the packing has to be changed while under pressure, a second pressure barrier needs to be used to help isolate the pressure.**

3. **By backseating the valve it is possible the gate will not seal the bore line.**

PROPRIETARY BOOKLET OF VALVEWORKS USA. DO NOT REPRODUCE WITHOUT EXPLICIT PERMISSION.

VALVEWORKS USA
WHEN PRESSURE DEMANDS QUALITY®

Limited Product Warranty

The following limited warranty ("Limited Warranty") is exclusive and shall supersede all other warranties, whether express, implied or statutory, including, but not by way of limitation, any warranty of merchantability of fitness for any particular purpose. All other warranties or liabilities, expressed or implied, oral or statutory, including any warranty of merchantability or fitness for a particular purpose are hereby terminated and waived upon Purchaser purchasing any Products (as that term is defined herein) manufactured by **VALVEWORKS USA**.

VALVEWORKS USA hereby warrants to each original purchaser ("Purchaser") of material(s) or product(s) (hereinafter collectively referred to as "Products" or "Product(s)") manufactured by **VALVEWORKS USA** that such products are free from material and workmanship defects when operated under Normal Use (as defined herein) and Normal Service (as defined herein) for a period of one (1) year from the date of shipment ("Warranty Period"). This warranty is valid only for the original purchaser of the material(s) or product(s), and is non-transferrable. "Normal Use" shall mean the intended use of the product for which it was designed by **VALVEWORKS USA**. "Normal Service" shall mean the necessary servicing as suggested or required by **VALVEWORKS USA**, industry standards, or applicable laws and regulations.

THIS WARRANTY WILL BE NULL AND VOID FOR THE FOLLOWING PRODUCTS:

- Other than testing during testing processes by **VALVEWORKS USA** in accordance with industry rules and regulations, any Product(s) that has been tested to, or subjected to, any pressure greater than the stated product working pressure* at any time, other than by **VALVEWORKS USA** during testing processes per industry rules and regulations. **PRODUCTS SHOULD NEVER BE TESTED / SUBJECTED TO PRESSURE GREATER THAN THE STATED PRODUCT WORKING PRESSURE*. THIS IMMEDIATELY VOIDS THIS LIMITED WARRANTY, AND IS AN EXTREMELY DANGEROUS SAFETY RISK.**
- Any product repaired, altered, or modified by any contractor, laborer, person or entity that has not been authorized in writing by **VALVEWORKS USA**.
- Any product, in **VALVEWORKS USA's** reasonable judgment, that has been subject to negligence, accident, improper storage, or improper handling by any person(s).
- Any product which has not been operated or maintained in accordance with normal practices and in conformity with the manufacturer's recommendations, industry standards, and operation and maintenance specifications of **VALVEWORKS USA**.

***Stated Product Working Pressure** is defined as "the maximum internal pressure that the equipment is designed to contain and / or control"

Under any circumstances where this Limited Warranty is voided on any Product(s) manufactured and supplied by VALVEWORKS USA, VALVEWORKS USA is immediately excluded from any and all liabilities associated with such Product(s).

For gate valves used in extreme service conditions such as "frac" applications, **VALVEWORKS USA** recommends full lubrication of the gate valve body cavity and bonnet assemblies between each frac stage (or zone). Failure to comply with this recommendation COULD result in warranty claims being denied. Custom orders, or orders where modifications are made to **VALVEWORKS USA** products by **VALVEWORKS USA** per the purchaser's request to the purchaser's design criteria, and do not conform to **VALVEWORKS USA** design criteria, are subject to review at the time of contract review to determine whether warranty coverage applies to that particular order. Unless specified otherwise in writing at the time of order placement, warranty coverage will NOT apply to the aforementioned type(s) of order(s).

PROPRIETARY BOOKLET OF VALVEWORKS USA. DO NOT REPRODUCE WITHOUT EXPLICIT PERMISSION.

VALVEWORKS USA
WHEN PRESSURE DEMANDS QUALITY®

VALVEWORKS USA obligations under this Limited Warranty consist of, and shall be expressly limited to, reasonable efforts to repair, replace or, at **VALVEWORKS USA'S** sole option, refund the purchase price. The cost of labor for installing a Product that has been repaired or replaced shall be borne by Purchaser. Replacement parts provided under the terms of this Limited Warranty are covered by this Limited Warranty for the remainder of the Warranty Period, and no obligations fulfilled under the terms and conditions of this Limited Warranty shall ever extend the Warranty Period. Limited Warranty services provided hereunder shall not give rise to any kind of liability that may be caused by the delays in **VALVEWORKS USA** performing its obligations under this Limited Warranty.

The remedy for claims against **VALVEWORKS USA** for any breach of this Limited Warranty shall be limited to the replacement of any product that was proven defective in material or workmanship. Such remedy shall only be available upon written notice to **VALVEWORKS USA** of such defect within thirty (30) days of delivery of the Product(s), and the return of such Product(s) to **VALVEWORKS USA** at the address provided herein for written notice. Costs of labor, freight, drayage, or other similar charges shall be at the expense of the customer.

Please contact **VALVEWORKS USA** at 1-318-425-0266 prior to returning any Product(s) covered by this Limited Warranty. Upon determination that a Limited Warranty claim is valid, **VALVEWORKS USA** shall issue a return authorization number. **HOWEVER, THE DELIVERY OF AN ALLEGEDLY DEFECTIVE PRODUCT NOT BEARING A VALID RETURN AUTHORIZATION NUMBER WILL BE REFUSED, AND THE SHIPMENT WILL BE RETURNED TO THE SENDER AT THE SENDER'S EXPENSE.** Except as specifically provided herein, any Purchaser hereby waives the right to seek claims, damages or other legal or equitable remedies against or from **VALVEWORKS USA**, its principals, subcontractors, agents, vendors, suppliers and/or design professionals under any and all causes of action whether statutory, at common law or at equity, including but not limited to any claims based on implied warranties of fitness, redhibition, reduction of the purchase price, negligence and/or strict liability. The agreements and remedies contained in this Limited Warranty are the sole remedies available to any Purchaser as to the issues raised herein, shall be enforceable to the fullest extent permissible by applicable state and federal law, and shall apply to any claim thereafter made against VALVEWORKS USA or any other person related to any **VALVEWORKS USA** Products. Purchaser's sole remedy is as prescribed in the terms and conditions of this Limited Warranty document. In no event shall **VALVEWORKS USA**, its agent(s), or employees be liable for any injuries or damages to any person or property whatsoever, or for any special, indirect, secondary, or consequential damage of any nature however arising. By Purchaser purchasing any Products from **VALVEWORKS USA**, Purchaser agrees (without any further action required by **VALVEWORKS USA** or Purchaser) to all remedies, waivers and limitations of warranty set forth herein.

Written Notice: Any written notice shall be sent to 1650 Swan Lake Road, Bossier City, Louisiana 71111.

The obligations of **VALVEWORKS USA** under this Limited Warranty are limited by the terms and conditions provided herein.

This warranty is limited in extent to the warranty, if any, which the user receives from the manufacturer(s) of any component part(s) or buyout items for resell. All other warranties or liabilities, expressed or implied, oral or statutory, including any warranty of merchantability or fitness for a particular purpose are expressly denied. In no event shall VALVEWORKS USA, its agent(s), or employees be liable for injury or damage to any person or property whatsoever or for any special, indirect, secondary, or consequential damage of any nature however arising.

ORDERS POLICY

All orders for Product(s) are subject to acceptance by **VALVEWORKS USA**, and such acceptance shall not be unreasonably withheld. Prices are subject to change without notice and any errors in published or quoted prices are subject to correction. No Product(s) may be returned for credit without written authorization from **VALVEWORKS USA**. Credit will not be issued for Product(s) after the Warranty Period. **VALVEWORKS USA** reserves the right to deduct reconditioning and handling charges when issuing credit for returned material(s) or product(s). Products of special design, not considered "standard" to the **VALVEWORKS USA** product line, will not be permitted to be returned.

PROPRIETARY BOOKLET OF VALVEWORKS USA. DO NOT REPRODUCE WITHOUT EXPLICIT PERMISSION.

VALVEWORKS USA
WHEN PRESSURE DEMANDS QUALITY®

DIMENSION TABLE KEY

A FLANGE TO FLANGE

B VALVE BORE SIZE

C BORE CENTERLINE TO BOTTOM

D BORE CENTERLINE TO TOP

E HANDWHEEL DIAMETER

NT NUMBER OF TURNS

WT APPROXIMATE WEIGHT

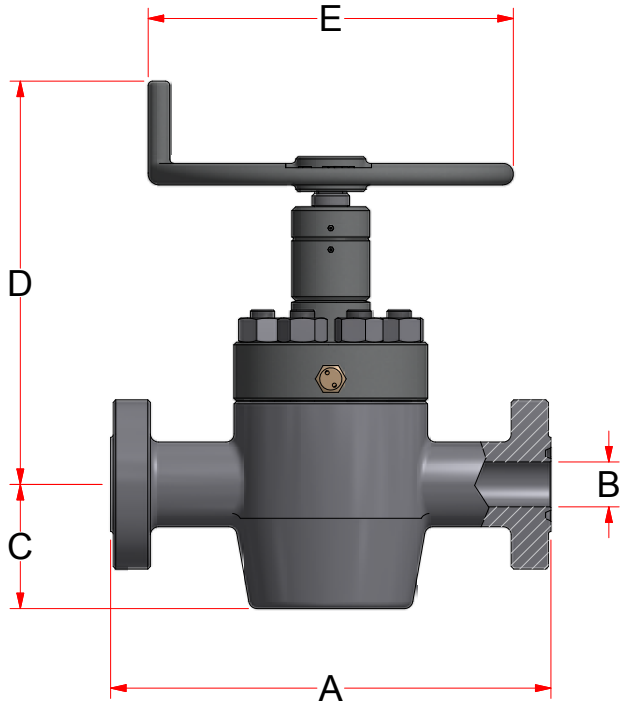

SIZE	WP (PSI)	A	B	C	D	E	NT	WT
1 13/16	10K	18 1/4	1 13/16	5 13/16	18 13/16	16	11 3/4	270
	15K	18	1 13/16	6 13/16	18 13/16	16	11 3/4	275
2 1/16	3K/5K	14 5/8	2 1/16	5 7/8	18 7/8	14	12	189
	10K	20 1/2	2 1/16	5 13/16	18 13/16	16	12 1/2	275
	15K	19	2 1/16	6 1/8	18 13/16	16	12 1/2	350
2 9/16	3K/5K	16 5/8	2 9/16	6 5/16	19 1/2	16	16 1/4	275
	10K	22 1/4	2 9/16	6 7/8	19 5/8	20	16	485
	15K	21	2 9/16	7 13/16	22 7/8	20	15 1/2	520
3 1/8	3K	17 1/8	3 1/8	7 13/16	20 1/2	16	17 1/2	337
	5K	18 5/8	3 1/8	7 9/16	20 1/2	16	17 1/2	355
3 1/16	10K	24 3/8	3 1/16	8 1/8	22	23	17 1/2	550
	15K	23 9/16	3 1/16	9 1/8	25 5/8	23	15 1/2	914
4 1/16	3K	20 1/8	4 1/16	9 5/16	22	20	23 1/4	498
	5K	21 5/8	4 1/16	9 13/16	22	20	23 1/4	550
	10K	26 3/8	4 1/16	10 1/8	28 3/4	24	23 1/4	950

PROPRIETARY BOOKLET OF VALVEWORKS USA. DO NOT REPRODUCE WITHOUT EXPLICIT PERMISSION.

VALVEWORKS USA

WHEN PRESSURE DEMANDS QUALITY®

1650 SWAN LAKE ROAD
BOSSIER CITY, LA USA 71111

PHONE	318-425-0266
FAX	318-425-0934
TOLL FREE	888-425-0266
EMAIL	SALES@VWUSA.US
WEBSITE	WWW.VALVEWORKSUSA.COM

PROPRIETARY BOOKLET OF VALVEWORKS USA. DO NOT REPRODUCE WITHOUT EXPLICIT PERMISSION.