GuardianMobility

PUCK ANTENNA ‘TSO’

by AERO ANTENNA TECHNOLOGIES

iridium CERTUS

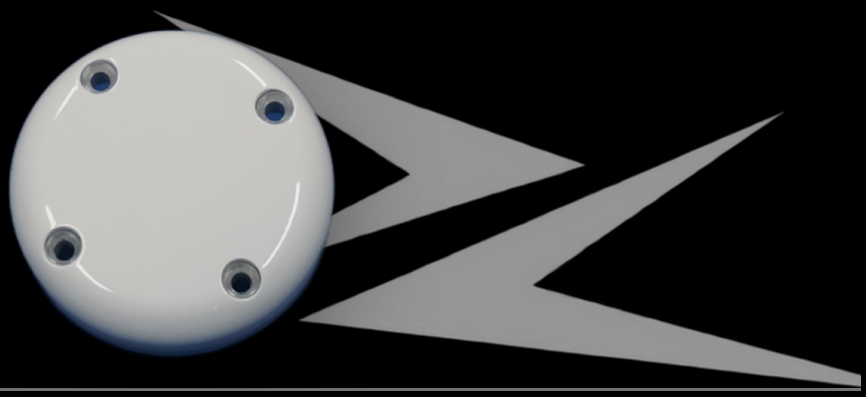

IRIDIUM CERTUS 100 AVIATION ANTENNA

A Guardian supported antenna option for the G6-S terminal.

Manufacturer part number: AeroAntenna AT1621-385 · **Guardian part number:** 102565

Description

The AeroAntenna AT1621-385 Puck is an Iridium Certus 100 antenna supported by Guardian Mobility for use with the G6-S satellite terminal. The G6-S is installed inside the cabin and uses an external antenna, so the antenna can be mounted where it has the best view of the sky while the terminal stays protected. Guardian publishes the cable loss limits and siting rules for this antenna in its installation manual, so installers can plan the run with confidence.

Key Features

- Iridium Certus 100 antenna for the G6-S
- Designed to DO-160G and DO-262F
- Remote mount: terminal stays in the cabin, antenna on the airframe
- Guardian supported option (PN 102565)
- Operating -55°C to +85°C, up to 70,000 ft
- TNC female connector, 20 W power handling

Cable loss budget

ITEM	LIMIT
Maximum RF loss in the antenna cable	0.84 dB
Maximum run with LMR-400	3.3 m
Maximum run with LMR-195	1.1 m

Siting

- Keep the Iridium antenna at least 12 in from people and from the GPS antenna.
- Keep at least 36 in from other external antennas.
- Fixed wing: top of the fuselage, within 8 in (20 cm) of the centreline.
- Rotary wing: as far forward as possible, with the antenna axis within 10° of vertical.
- The installation must be certified (STC, LSTC, 337 or local equivalent) and carried out by a qualified installer.

GuardianMobility



MOUNTING SIDE

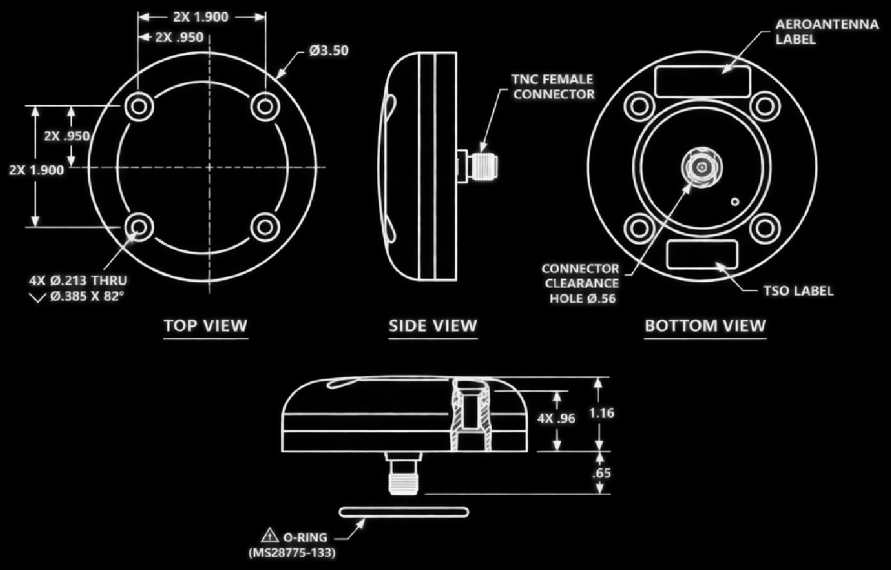

DIMENSIONS IN INCHES

PUCK ANTENNA Specifications

FREQUENCY
1616–1626.5 MHz (Iridium)

POLARIZATION
Right Hand Circular (RHCP)

AXIAL RATIO
3 dB max. at boresight

IMPEDANCE / VSWR
50 Ohms / ≤ 1.8:1

RADIATION COVERAGE
+0.04 dBic at θ = 0° · +1.40 dBic at 0° < θ < 45° · +0.25 dBic at 75° ≤ θ < 82°

POWER HANDLING
20 Watts

CONNECTOR
TNC Female

WEIGHT
0.70 lbs (0.32 kg) maximum

ALTITUDE
70,000 ft

OPERATING TEMPERATURE
-55°C to +85°C

RADOME MATERIAL
ULTEM 2200

FINISH
Fluid-resistant polyurethane enamel

COLOUR
FED-STD-595 White 17925

DESIGNED TO
DO-160G, DO-262F

TSO
C159E — complete

ENVIRONMENTAL CATEGORY
E1-AB[BD][S(CLMY)U2(FF1)]XSFSFSZXXXXXXX[2A2A]CAC

Guardian Mobility reserves the right to vary these specifications without notice.

Guardian Mobility Inc.
43 Auriga Drive, Ottawa,
Ontario, K2E 7Y8

inquires@guardianmobility.com
Fax: 888-817-8159
Phone: 613-225-8885